CITY OF FAIRVIEW, OREGON

DESIGN STANDARDS AND STANDARD DETAILS

FAIRVIEW CITY COUNCIL RESOLUTION

(47-2018)

August 1st, 2018

Introduction: The enclosed design standards and standard details are intended to be used to guide design for all construction within the public right-of-way or where facilities are to be maintained by City Staff. The standards and drawings are developed to work with the City's Construction Specification to guide the design and construction projects within the City but do not provide authority to not meet City Code, environmental rules or permits, or local, state and federal law.

Table of Contents

Design Standards

1.00 – GENERAL TECHNICAL REQUIREMENTS 2
- *1.05 AUTHORITY AND PURPOSE* 2
- *1.10 DEFINITIONS* 9
- *1.15 ENGINEERING POLICY* 9
- *1.20 APPLICABILITY* 9
- *1.25 STANDARD SPECIFICATIONS* 9
- *1.30 MODIFICATIONS TO STANDARD SPECIFICATIONS* 9
- *1.35 APPROVAL OF ALTERNATIVE MATERIALS OR METHODS* 9
- *1.40 EASEMENTS* 10
- *1.45 REVISIONS TO DESIGN STANDARDS* 11
- *1.50 SUBMITAL REQUIREMENTS* 11
- *1.55 CAD DRAWING STANDARDS* 12
- *1.60 AS-BUILT REQUIREMENTS* 18

2.00 – STORMWATER DESIGN STANDARDS 21
- *2.05 MINIMUM DESIGN CRITERIA* 21
- *2.10 FLOODPLAIN INFORMATION* 24
- *2.15 DOWNSTREAM ANALYSIS REPORT* 24
- *2.20 CULVERTS* 25
- *2.25 STORMWATER DETENTION/RETENTION* 25
- *2.30 WATER QUANTITY STANDARDS* 28
- *2.35 ALIGNMENT AND COVER* 28
- *2.40 STRUCTURES* 29
- *2.45 PIPE MATERIALS AND SIZE* 31

3.00 – WASTEWATER DESIGN STANDARDS 34
- *3.05 WASTEWATER PLANS* 35
- *3.10 PIPE MATERIALS AND SIZE* 35
- *3.15 MINIMUM DEISGN CRITERIA* 35
- *3.20 ALIGNMENT AND COVER* 38
- *3.25 SEPARATION WITH WATERLINES* 39
- *3.30 RELATION TO WATERCOURSES* 39
- *3.35 MANHOLES* 40
- *3.40 CLEANOUTS* 41
- *3.45 SEWER LATERALS* 41
- 3.50 CONECTIONS TO EXISTING SEWERS 42
- *3.55 PRIVATE SEWER LINES* 42
- *3.60 SUBSURFACE DISPOSAL* 43
- *3.65 WASTEWATER PUMP STATION DESIGN STANDARDS* 43

4.00 – WATER SYSTEM DESIGN STANDARDS 46
- *4.05 PIPE, VALVE, AND FITTING MATERIAL SIZE* 47
- *4.10 GRID SYSTEM* 48
- *4.15 DEAD END MAINS* 48
- *4.20 ALIGNMENT AND COVER* 48
- *4.25 SEPARATION WITH SEWER LINES* 49
- *4.30 SEPARATION WITH UTILITIES* 49
- *4.35 RELATION TO WATERCOURSE* 50
- *4.40 APPURTENANCES* 51
- *4.45 RAILROAD OR FREEWAY CROSSINGS* 52
- *4.50 BACKFLOW PREVENTION* 52

Table of Contents (Continued)

4.55 WATER SERVICES LINES 52
4.60 SYSTEM TESTING 55
4.65 WATER QUALITY SAMPLING STATIONS 55

5.00 – STREET DESIGN STANDARDS 57
5.05 GENERAL REQUIREMENTS 57
5.10 STREETS 60
5.15 ALLYES AND PRIVATE RESIDENTIAL STREETS/ACCESSWAYS 68
5.20 DRIVEWAYS 68
5.25 SIDEWALKS 69
5.30 BICYCLE FACILITIES 71

Table of Contents (Continued)

Standard Details

FV200 – Concrete Cradle and Cap

FV201 – Trench Backfill

FV202 – Pipe Anchor

FV203 – Area Drain Type II

FV204 – End of Mainline Cleanout

FV205 – Catch Basin Frame and Grate

FV206 – Manhole Riser and Grade Rings

FV207 – Manhole Cover and Frame

FV210 – Inside Drop Manhole

FV213 – Drywell & Sedimentation Manhole

FV216 – Standard Manhole

FV218 – Catch Basin

FV219 – Sewer Service Connection

FV220 – Curb and Gutter Inlet

FV450A – Horizontal Thrust Blocking

FV450B – Vertical Thrust Blocking

FV451 – Fire Hydrant Assembly

FV452 – Valve Box and Extension Assembly

FV453 – Permanent or Temporary 2” & 4” Blow Off

FV455 – Air Release and Valve Assembly 2” and Smaller

FV456 – ¾” to 1 ½” Water Service

FV457 – Standard 2” Water Service

FV458 – Compound Meter 2” Service

FV459 – Compound Meter Larger than 2” Service

FV460 – Combination Meter

FV461 – Remote Reader

FV462 – Double Check Assembly-Detector

FV463 – Standard Water Sampling Station

FV501 – Collector Street Section

Table of Contents (Continued)

FV502 – Local Street Section

FV503 – Cul-De-Sac

FV504 – Utility Placement

FV520 – Standard Curbs

FV521 – Standard Sidewalk

FV522A – Commercial Driveway (Curb-Tight Sidewalk)

FV522B – Commercial Driveway (Planter Strip)

FV523A – Standard Driveway (Curb-Tight Sidewalk)

FV523B – Standard Driveway (Planter Strip)

FV525 – Wheelchair and Handicap Ramps

FV526 – Curb Knockout

FV527 – Street Cut and Repair

FV529 – Monument Box

Table of Contents

1.00 – GENERAL TECHNICAL REQUIREMENTS 2
1.05 AUTHORITY AND PURPOSE 2
1.10 DEFINITIONS 2
1.15 ENGINEERING POLICY 9
1.20 APPLICABILITY 9
1.25 STANDARD SPECIFICATIONS 9
1.30 MODIFICATIONS TO STANDARD SPECIFICATIONS 9
1.35 APPROVAL OF ALTERNATIVE MATERIALS OR METHODS 9
1.40 EASEMENTS 10
1.45 REVISIONS TO DESIGN STANDARDS 11
1.50 SUBMITAL REQUIREMENTS 11
1.55 CAD DRAWING STANDARDS 12
1.60 AS-BUILT REQUIREMENTS 18

1.00 – GENERAL TECHNICAL REQUIREMENTS

1.05 AUTHORITY AND PURPOSE

The purpose of these Design Standards is to provide a consistent policy under which certain physical aspects of public facility design shall be implemented. Most of the elements contained in this document are public works oriented and it is intended that they apply to both publicly financed public improvements under City contract and privately financed public improvements under private contract designated herein.

These Design Standards cannot provide for all situations. They are intended to assist but not to substitute for competent work by design professionals. It is expected that engineers will bring to each project the best of skills from their respective disciplines.

The Design Standards are also not intended to unreasonably limit any innovative or creative effort that could result in better quality, better cost savings, or both. Any proposed departure from the Design Standards will be judged, however, on the likelihood that such variance will produce a compensating or comparable result in every way adequate for the user and City resident.

Alternate materials and methods will be considered for approval by the City as the need arises and conditions warrant modification. This consideration will be on a case-by-case basis and require sufficient justification prior to approval.

1.10 DEFINITIONS

Alley – A public access easement or right-of-way not more than 20-feet and not less than 12-feet in width that intersects with a public street.

Approved Backflow Prevention Assembly – A testable assembly that has been investigated and approved by the Oregon State Health Division.

Arterial Street – A major facility for moving intra-area traffic and for moving traffic to and from the freeway/expressway system.

As-Built Plans – Plans signed and dated by the Engineer of Record indicating that the plans have been reviewed and revised, if necessary, to accurately show all as-built construction. Also referred to as record drawings.

Average Daily Demand – The total volume of water delivered to the system in 1-year divided by 365-days.

Backflow – The reverse of flow from its normal or intended direction of flow. Backflow can be caused by back-pressure or back-siphonage.

Backflow Preventer – An approved testable assembly or means to prevent backflow into the potable water system.

Back-siphonage – Backflow that results from negative pressure (partial vacuum) in the supply piping system.

Bike Lanes – A designated travel-way for bicyclists that is established within the roadway directly adjacent to the outside vehicular lane or on the shoulder.

Bike Path – A designated travel-way for bicyclists that is completely separated from the vehicular travel lanes and is within independent rights-of-way.

Bike Route – A designated travel-way for a bicyclist that is shared with vehicular traffic. The roadway is designated with signs for bicycling (no pavement markings for the bike route or delineation of parking spaces is used).

Building Fire Flow Requirements – Fire flow requirements based on type of occupancy and building material construction.

Building Service Lateral – A public wastewater sewer between the property line or public easement line and the wastewater sewer main.

Building Sewer – A private wastewater sewer between the property line or public easement line connecting to the building service lateral and a point 5-feet outside the building.

Building Supply – The pipe carrying potable water from the water meter or other source of water supply to a building or other point of use or distribution on the lot. Building supply shall also mean customer line.

CAD – Computer aided design.

City – The City of Fairview, Oregon and the Public Works Staff.

Collection Systems – Facilities maintained by the City connected thereto for the collecting, pumping, conveying, and controlling of wastewater.

Collector Sewer – The portion of the public wastewater system that is primarily installed to receive wastewater directly from individual residences and other individual public or private structures.

Collector Street – A facility that allows traffic within an area or neighborhood to connect to the arterial system.

Core – To cut and remove a portion of pipe, manhole, or pavement with a circular hollow drill.

Cross Connection – Any physical connection between foreign material, including other water sources, and the potable water that the system supplies.

Cul-de-sac – A dead-end street having a circular turnaround area at the end.

Curb – The line indicating the edge of the vehicular roadway within the overall right-of-way.

Cut Sheets – Sheets of tabulated data indicating stationing, structures, fittings, angle points, beginning of curve, points on curve, end of curves, street grade, pipe slope, staking offset, various elevations, and offset cuts for streets, waterlines, wastewater sewers, and storm drains.

Datum, Horizontal – The horizontal control network of the City was adjusted to the North American Datum 83(91) expressed in Oregon North Zone State Plane Coordinates in international feet.

Datum, Vertical – The vertical elevation control for the City is "The National Geodetic

Vertical Datum of 1929" that corresponds to the USC&GS 1947 Datum.

Dead-end Street – A street or series of streets that can be accessed from only one point. Dead-end streets can be either temporary (intended for future extension as part of a future street plan) or permanent. Permanent dead-end streets must provide adequate turn-around capability.

Definition of Words – That whenever in these Standards, the words "directed", "required", "permitted", "ordered", "designated", or words of like importance are used, they shall be understood to mean the direction requirement, permission, or order of designation of the Engineer. Similarly, the words "approved", "acceptable", or "satisfactory", shall mean approved by, acceptable to, or satisfactory to the Engineer.

Demand – The total quantity of water supplied for a given period of time to meet the various required uses. The various uses include residential, irrigation, commercial, and industrial uses as well as firefighting, system losses, other unaccounted for, and miscellaneous uses.

Design Intensity – The uniform rainfall intensity, inches per hour, associated with a duration equal to the time of concentration of the basin and a specified return frequency (e.g., 2-year, 10-year, etc.) that is used to calculate the peak discharge rate to be used for stormwater conveyance system design.

Design Storm – A rainfall event of a specified duration (e.g., 6-hour, 12-hour, 24-hour) and return frequency (e.g., 2-years, 10-years, etc.) that is used to calculate the runoff volume and/or discharge rate to be used for stormwater system design.

Designated Arterial or Collector Street – A street designated as an arterial or collector in the Comprehensive Plan.

Detention – The storage and subsequent release of excess stormwater runoff to control peak discharge rates prior to discharge to the storm drain or natural drainageway.

Detention Volume – The storage volume required to control the peak discharge rates at the point of discharge from a development.

Development – Any man-made change to improved or unimproved real estate, including but not limited to construction, installation, or alteration of buildings or other structures, condominium conversion, land division, establishment or termination of a right of access, storage on real property, tree cutting, and clearing, mining, dredging, filling, grading, paving, excavation or drilling operations.

Direct Discharge – Any stormwater discharge from a developed site that has not passed through approved water quality treatment prior to its ultimate outfall to a natural drainageway, wetland, or other natural resource area.

Domestic Wastewater – The liquid and water-borne waste derived from the ordinary living processes, free from industrial wastes, and of such character to permit satisfactory disposal, without special treatment, into the public wastewater system or by means of private wastewater disposal system.

Double Check Detector Assembly – A line-sized, approved double check valve assembly with a parallel meter and meter-sized, approved double check valve assembly. The purpose of

this assembly is to provide backflow protection for the distribution system and, at the same time, provide a metering of the fire system showing any system leakage or unauthorized use of water.

Double Check Valve Assembly – An assembly composed of two single, independently acting approved check valves, including tightly closing shut-off valves located at each end of the assembly and fitted with properly located test cocks.

Drainage Facilities – Pipes, ditches, detention basins, creeks, culvert bridges, etc., used singularly or in combination with each other for the purpose of conveying or storing stormwater run-off.

Drywell – See Stormwater Sump.

Easement – Areas located outside of dedicated rights-of-way that are granted to the City for special uses and public facilities.

Engineer of Record – A registered professional engineer licensed to practice in the State of Oregon who is responsible for the design of a public improvement project and has stamped the plans.

Expansion Joint – A joint to control cracking in the concrete surface structure and is filled with preformed expansion joint filler.

Fire Protection Service – A metered connection to the public water main intended only for the extinguishment of fires and the flushing necessary for its proper maintenance.

French Drain or Leach Line – A covered underground excavated trench filled with washed gravel that surrounds a perforated delivery pipe used to receive storm water, wherein the sides and bottom of the trench are porous, permitting the storm water to seep into the ground.

Grade – The degree of inclination of a road or slope.

Hydrant Lead – The waterline connecting the fire hydrant to the auxiliary valve on the City distribution Main.

Impervious Areas – Those hard surface areas located upon real property that either prevent or retard saturation of water into the land surface, as existed under natural conditions pre-existent to development, and cause water to run off the land surface in greater quantities or at an increased rate of flow from that present under natural conditions pre-existent to development.

Industrial Waste − Solid, liquid, or gaseous waste resulting from any industrial, manufacturing, trade, or business process from development, recovery, or processing of natural resources.

Interceptor Sewer – A primary public wastewater pipe that conveys wastewater directly into the Wastewater Treatment Plant.

Irrigation Service – A metered connection intended for seasonal use and delivering water that is not discharged to the wastewater system.

Local Street – A facility designated to primarily serve direct access to abutting land and

offers the lowest level of traffic mobility. Through-traffic movement is deliberately discouraged.

Longitudinal Joint – A joint, which follows a course approximately parallel to the centerline of the roadway.

Major Trees – Trees that are 30-inches or larger in diameter and are either within the right-of-way or public easement or are within 10-feet of the right-of-way or public easement. Major trees are protected by the City's "Trees First" policy and design modifications of public facilities may be required to accommodate tree preservation.

Maximum Daily Demand – The maximum volume of water delivered to the system in any single day of the year, divided by one day.

Minor Partition – See Partition.

Natural Grade – The grade of the land in an undisturbed state.

On-Site Detention – The detention of stormwater from a private storm drain in a privately owned and maintained storm drain system to provide a controlled release, at or below a maximum allowable rate, to the public storm drain system.

Outfall – The point at which collected, concentrated stormwater is discharged, generally from a pipe(s), from a development to an open drainage element such as a ditch, channel, swale, stream, river, pond, lake or wetland.

Owner – The owner of record of real property as shown on the latest tax rolls or deed records of the County, and includes a person who furnishes evidence that he is purchasing a parcel of property under a written recorded land sale contract.

Partition – To divide an area or tract of land into 2 or 3 parcels within a calendar year when such area or tract of land exists as a unit or contiguous units of land under single ownership at the beginning of such year.

Peak Hour Demand – The maximum volume of water delivered to the system in any single hour of the year multiplied by 1-hour.

Peak Run-off – The maximum stormwater runoff rate (CFS) determined for the design storm or design rainfall intensity.

Person – Individual firm, corporation, association, agency, or other entity.

Plans – The Standard Details or reproductions thereof and project specific plans, profiles, cross sections, elevations, details, and other working or supplementary drawings signed by the Engineer of Record that show the location, character, dimensions, and details of the work to be performed. Plans for privately financed public improvement projects must be approved by the Project Manager. Plans for publicly financed public improvement projects may either be bound in the same book as the balance of the Contract Documents or bound in separate sets and are a part of the Contract Documents regardless of the method of binding.

Potable Water – Water that is satisfactory for drinking, culinary, and domestic purposes and meets the requirements of the health authority having jurisdiction.

Private Collection System – A privately owned and maintained lateral wastewater system installed to serve multi-unit structures on single ownership properties that cannot legally be further divided.

Private Storm Drain – A storm drain located on private property.

Projected Maximum Daily Demand – The maximum volume of water anticipated to be delivered to the system in a future single-day of a year divided by 1-day.

Public Storm Drain – Any storm drain in public right-of-way or easement operated and maintained by the City.

Public Wastewater System – Any wastewater system in public right-of-way or easement operated and maintained by the City for carrying wastewater and industrial wastes.

Release Rate – The controlled rate of release of drainage, storm, and runoff water from property, storage pond, runoff detention pond, or other facility during and following a storm event.

Residential Street – See Local Street.

Retention – The process of collecting and holding surface and stormwater runoff with no surface outflow from a developed property.

Right-of-Way – A general term denoting public land, property, or interest therein acquired for or devoted to a public street or accessway.

Roadway – That portion of a street and its appurtenances, typically between curbs or ditches, primarily used for vehicular traffic.

Sedimentation – Deposition of erosional debris soil sediment transported by water.

Sewage – A combination of the water-carried wastes from residences, business buildings, institutions, and industrial establishments, except industrial wastes.

Sewer Lateral – A building's wastewater service pipe.

Sidewalk – A path along the side of a road for pedestrians. A right-of-way deeded, dedicated, and designated for the use of non-motorized vehicles and pedestrians.

Silt – Fine textured soil particles, including clay and sand, as differentiated from coarse particles of sand and Gravel.

Standard Details or Standard Detail Drawings – Detailed representations of structures, devices, or instructions set forth in the Public Works Standards.

Stormwater Sump – A drainage facility (or system) designed to utilize the infiltration capability of the ground, commonly referred to as percolation, to dispose of surface and stormwater runoff.

Streets – Any street, avenue, boulevard, alley, lane, bridge, bicycle path, road, public thoroughfare or public way, and any land over which a right-of-way has been obtained or granted

for any purpose of public travel.

Structures – Those structures designated on the standard plans such as catch basins, manholes, etc.

Subdivision – To divide an area or tract of land into 4 or more lots within a calendar year when such area or tract of land existed as a unit or contiguous units of land under a single ownership at the beginning of such year.

Swale – A broad-bottomed, shallow, vegetation-lined channel that allows for reduced flow velocity and filtration of stormwater, generally with flow depths less than 1-foot.

Total Fire Flow – A combination of building fire-flow requirements, any internal system fire-flow requirements (e.g., sprinklers), and domestic maximum daily demand (highest 24-hour consumption within the last 3- years).

Transverse Joint – A joint that follows a course approximately perpendicular to the centerline of the roadway.

Treatment Volume – The storage volume necessary to provide the required level of water quality treatment of stormwater prior to discharge to a storm drain element, facility, or natural drainage element.

Trunk Sewer – A wastewater pipe that is primarily intended to receive wastewater from collector pipes, other trunk sewers, existing major discharges of raw or inadequately treated wastewater, or water pollution control facilities.

Turnaround Area – A paved area of sufficient size and configuration that a motor vehicle may maneuver so as to travel in the opposite direction.

Uniform Plumbing Code – The Uniform Plumbing Code adopted by the International Association of Plumbing and Mechanical Officials (current edition) as revised by the State of Oregon and called the "Oregon State Plumbing Specialty Code".

Wastewater – The total fluid flow in the wastewater system that includes industrial waste, sewage, or any other waste (including that which may be combined with any ground water, surface water, or storm water) that may be discharged into the wastewater system.

Water Distribution System – Water distribution pipelines, pumping stations, reservoirs, valves, and ancillary equipment used to transmit water from the supply source to the service line.

Water Main – The water-supply pipe for public or community use.

Water Service Line – The pipe connection from the City water main to the metering device, hydrant, or fire line backflow prevention assembly.

Wet Weather Season – Defined for the purposes of construction and development in the City as the period between October 1st and the following May 31st.

Wetlands – Those lands adjacent to watercourses or isolated therefrom that may normally or periodically be inundated by the waters from the watercourse or the drainage waters from the

drainage basin in which it is located. These include swamps, bogs, sinks, marshes, and lakes, all of which are considered to be part of the watercourse and drainage system of the City and shall include the headwater areas where the watercourse first surfaces. They may be, but are not necessarily, characterized by special soils such as peat, muck, and mud.

1.15 ENGINEERING POLICY

It shall be the policy of the City to require compliance with Oregon Revised Statute 672 for professional engineers.

All engineering plans, reports, or documents shall be prepared by a registered professional engineer or by a subordinate employee under the engineer's direction, and shall be signed by the engineer and stamped with the engineer's seal to indicate the engineer's responsibility for them. It shall be this Engineer of Record's responsibility to review any proposed public facility extension, modification, or other change with the City prior to engineering or other proposed design work to determine any special requirements or whether the proposal is permissible. A "Preliminary Review" and/or a "Plans Approved for Construction" stamp of the City on the plans, etc., for any job does not in any way relieve the engineer of responsibility to meet all requirements of the City or obligation to protect life, health, and property of the public. The plan for any project shall be revised or supplemented at any time it is determined that the full requirements of the City have not been met.

1.20 APPLICABILITY

These Design Standards shall govern all construction and upgrading of all public and privately financed public facilities in the City and applicable work within its service areas.

1.25 STANDARD SPECIFICATIONS

Except as otherwise provided by these Design Standards, all construction design detail, workmanship, and materials shall be in accordance with the current edition of the City Construction Standard Specifications and Standard Details.

1.30 MODIFICATIONS TO STANDARD SPECIFICATIONS

Special applications not covered in these Design Standards require review and approval by the City. Submittal of full design calculations, supplemental drawings, and information will be required prior to any approval.

1.35 APPROVAL OF ALTERNATIVE MATERIALS OR METHODS

Any substitution material or alternate method not explicitly approved herein will be considered for approval as set forth in ***Section 1.05***. Persons seeking such approvals shall make application in writing. Approval of any deviation from these Design Standards shall be in written form.

Any alternate must meet or exceed the minimum requirements set in these Design Standards.

The written application is to include, but is not limited to, the manufacturer's specifications and testing results, design drawings, calculations, and other pertinent information.

Any deviations or special problems shall be reviewed on a case-by-case basis and approved by the Engineer. When requested by the City, full design calculations shall be submitted for review with the request for approval.

1.40 EASEMENTS

When, in the City's opinion, it is impractical to locate City utilities in right-of-way, the utilities shall be placed in an easement. All public utility easements granted to the City shall be perpetual easements.

All easements shall be exclusive to a single City utility unless otherwise approved by the City.

The conditions of the easement shall be such that the easement shall not be used for any purpose that would interfere with the unrestricted operation and maintenance of the utility. Under no circumstances shall a building or any other structure be placed over a utility or utility easement. This shall include overhanging structures with footings located outside the easement.

Easement locations for public utility facilities serving a PUD, apartment complex, or commercial or industrial development shall be in parking lots, private drives, or similar open areas that will permit an unobstructed vehicle access for maintenance.

Except with approval of the City, easements shall be placed on a single property, not centered on property lines, and the utility shall be centered in the easement. If an easement centered along a property line is approved by the City, the utility shall be offset 18-inches from the property line.

All easements must be furnished to the City for review and approval prior to recording and the start of construction.

Easement location, purpose, width, and description shall be shown on the plans.

Minimum width of a public utility access easement shall be 15-feet.

Minimum width of a public utility easement shall be 20-feet.

Open channels shall have easements sufficient in width to cover the 100-year floodplain line when a 100-year design storm is required, or 15-feet from the waterway centerline, or 10-feet from the top of the recognized bank, whichever is greater. In addition, a 15-foot wide access easement shall be provided on both sides of the channel for channel widths greater than 14-feet at the top of the recognized bank.

Easement width for utilities shall be determined by multiplying the vertical distance from the pipe invert to the ground surface by 2, then adding the nominal pipe diameter plus 2-feet. Easement width shall be rounded upward to even 5-foot increments, but in no case shall be less than 20-feet. In areas of steep (15% slope or greater) or unusual topography, a wider easement may be required as determined by the City.

For multiple utilities to be located within the same easement, the same above rules apply except that the separation of the sewers, both horizontally and vertically, must be considered. Utilities must have at least a 1-foot horizontal separation of the outside surfaces, including bells. For multiple utilities at differing elevations, the horizontal separation and easement width is determined as shown below:

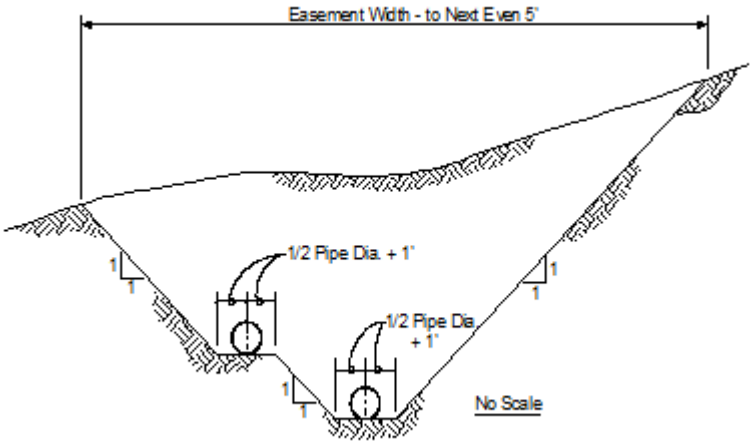

Any water main placed within a water main easement will be permanently marked with blue plastic markers at all angle points, and no less than every 200-feet, or at a change in direction. In addition, markers shall be placed where the waterline intersects the public right-of-way at the easement location. A monument cap set in the pavement of parking lots, driveways, etc. shall be an acceptable alternative to the sign.

1.45 REVISIONS TO DESIGN STANDARDS

It is anticipated that revisions to these Design Standards will be made from time to time. The date appearing on the title page is the date of the latest revision. Users should apply the latest published revision to the work contemplated.

It shall be the user's responsibility to maintain his/her copy of these Design Standards with the latest changes.

1.50 SUBMITAL REQUIREMENTS

1.50.01 General Guidelines

Construction plans for all privately financed public improvements shall be submitted to the City. The City will coordinate the plan review and approval of all construction plans that will include review for compliance with all conditions of approval, Fairview Public Works Standards, the Fairview Community Development Plan, City Code, Ordinances, and any relative master plan.

All plan submittals shall include information required in ***Section 1.50*** of these Design Standards along with all other information requested by the City. This information is to include, but not be limited to, construction cost estimates, easement documents, right-of-way dedications, executed agreements, and a plan check and inspection fee. All submittals will be reviewed for completeness and the Engineer of Record notified if required information is missing. Submittals should be made in a timely manner as lack of information to the City may impede the review process.

1.50.02 Supporting Information

The Engineer of Record shall submit sufficient supporting information to justify the proposed design. Such information shall include, but not be limited to, the following:

1. Design calculations
2. For storm drains, hydrology and hydraulic calculations with basin maps

3. Alternate materials specifications including manufacturer's design application recommendation
4. Grading plan support information to include as appropriate:
   a. Soils engineering report
   b. Hydrology report
   c. Engineering geology report
5. A narrative of the stormwater facility, including its intended functionality, and an explanation of how the outlet(s) function to meet peak discharge control and water quality treatment control requirements
6. Downstream analysis:
   a. An analysis shall be performed to determine the potential impacts from the project on the downstream system. At a minimum, the downstream analysis will include the area from the project site to a point, to be determined by the city, downstream of the project site. The analysis must proceed far enough along the drainage course to determine that nothing downstream of the end point will be adversely affected by the project's runoff. Refer to ***Section 2.15*** of the Design Standards, Downstream Analysis Report, for a detailed description of how to perform a downstream analysis.
   b. For waterline systems, water model calculations

Facility Plan:
When designing wastewater or stormwater sewer facilities, a facility plan shall be submitted with the construction plans when required by the City. This plan shall be used to identify and analyze the proposed extension of facilities. Whenever practicable the topographic plan shall show all upstream and tributary areas within at least 200-feet of the proposed development.

The plan shall include existing contours at 2-foot intervals, or as approved by the City, including location of existing structures and public and private utilities.

Facility Plan:
A maintenance plan shall be submitted for City review and approval for all privately financed private detention, retention, and water quality facilities. The plan shall include types and frequencies of maintenance activity required.

1.55 CAD DRAWING STANDARDS

1.55.01 General Guidelines

The City of Fairview Drafting Standards were developed to provide guidance to both the manual and CAD-based drafter although the majority of the documents deal with CAD-related issues. It is hoped that these standards will improve the consistency of preliminary plans, construction plans, and as-built drawings. These standards address many of those routine questions that a rise during the design and drafting stages of developments within the corporate limits of the City.

1.55.02 CAD Criteria

CAD files submitted to the City shall be AutoCAD 2015 .dwg files. All CAD files submitted to the City must conform to the City's layering. All CAD files submitted to the City must be accompanied by the required City of Fairview documentation records. The City maintains documentation requirements outside at the development review desk.

1.55.03 Electronic Acceptance Standards

All as-built construction drawings shall be submitted in accordance with ***Section 1.60*** of *these Design* Standards. This section outlines electronic standards, layering conventions, and sheet

layouts. Electronic file format shall be compatible with the AutoCA*D version accepted by the City.*

All as-built drawings shall accurately represent as-built construction and shall be graphically and mathematically correct, i.e., drawing shall represent changes in dimensioning during construction.

Submit all information required to reproduce a hard copy from the electronic file. The electronic copy and the hard copy shall be identical with the exception of the original signature of the signature on the engineer's stamp. Use only standard AutoCAD line types, fonts, and shapes. If the City encounters significant problems during reproduction, the drawing shall not be accepted.

If Xref's are used with a drawing, bind all Xref's before submission. The City will not accept drawings with Xref's. Purge all invisible drawing objects before submission.

Files submitted shall be on a CD ROM or other storage media approved by the Engineer. Clearly label all media with City project number, project name, file name and extension(s), AutoCAD version, and date.

1.55.04 Plan Sheet Sizes, Layouts and Format

Construction plans and specifications shall be stamped by a professional engineer licensed in the State of Oregon. Drawings shall be, except as noted below, ANSI "D" size (22-inch by 34-inch) sheets. Draw the plan so the north arrow is prominent and towards the top (long side) or left of the sheet whenever possible.

Scales: Different standards, other than the 2 listed below, may be used as approved by the City:

Plan/Scale	Horizontal	Vertical
Street	1" = 20'	1" = 2'
Sanitary Sewer	1" = 40'	1" = 4'
	1" = 50	1" = 5'
Storm Sewer	1" = 40	1" = 4'
Water	1" = 20	1" = 2'
	1" = 40	1" = 4'
Parks	1" = 20	1" = 2'

Complex utility locations may require a larger scale plan to show the necessary detail. If a scale is indicated on a plan sheet, a bar scale shall be used.

Provide match lines with matched sheet number where the plan is drawn on more than one sheet. If the plan is shown on three or more sheets, include a site plan key map at a common scale of 1" = 100' or 1" = 200' or representative fraction of 1:1200 or 1:2400.

Section and detail call-outs are shown on both the plan and the section/detail. They should include

assigned section/detail letters/numbers and drawing sheet location number.

Plans must be of such quality that when reduced to 50% of original scale the prints will be clearly legible.

Plan Sequence: Use the following sequence for the applicable sheets for design and as-built plans:

1. Cover Sheet – Site Plan Key Map
2. Symbols and Abbreviations
3. Plat Sheet
4. Composite Utility Drawing
5. Grading and Erosion Prevention & Sediment Control (EPSC)
6. Grading and EPSC Details and Notes
7. Street and Storm Plan and Profile
8. Offsite Street and Storm Plan and Profile
9. Street and Storm Details and Notes
10. Sanitary Sewer and Water Plan and Profile
11. Offsite Sanitary Sewer and Water Plan and Profile
12. Sanitary Sewer and Water Details and Notes
13. Streetlight Plan (may be included on composite utility drawing)
14. Traffic Control Plan
15. Standard Details and Notes

An index is to be included on the cover sheet of all plan sets using the titles as they appear on the plan sheet(s). The vicinity map needs to show the locations and limits of the project and specify scale. Plan and profile shall be placed on the same sheets. The horizontal scale of the profiles shall be the same as that on the plan.

Required Information: The following items shall be contained within the title block aligned vertically along the right side of each sheet:

1. Project title
2. Sheet title
3. Designer's company/agency information – name, address, voice/fax telephone numbers, e-mail address, logo, etc.
4. Engineer's stamp and signature
5. Review stamp (if applicable) – When plans are submitted to the City for review and comment, the plans shall be clearly marked "PRELIMINARY – NOT FOR CONSTRUCTION" over the engineering stamp and signature.
6. Date of drawing
7. Revision block – including area for revision number, description, date, and name
8. Project name, date, time, and file name and project number – orientated vertically near the bottom left hand corner of the sheet
9. "City Approval" (blank area for City approval stamp and signature by the Engineer)

Submittals shall contain the following sheets: title sheet (unless not required by the Engineer), plan and profile sheet(s), Standards Checkoff Sheet (see CAD Standards folder), and detail sheet(s).

Drafting Requirements:

1. Plan sheets may be plotted from CAD files using industry standard output devices.
2. Minimum lettering size is 0.10-inch (metric size needed) to ensure legibility after reduction to one-half size. Lettering and dimensioning shall be placed so they may be read from left

to right as viewed from the bottom of the sheet and from bottom to top when viewed from the right side of the sheet. Text should be clear of any lines.

3. Existing features and topography shall be shown with sufficient density to adequately reproduce at a 50% reduction of scale.
4. All existing and proposed improvements shall be referenced to the City of Fairview Photogrametric Control Network and conform to Multnomah County Surveying Standards.
    a. For survey reference, improvement project coordinate values are based on the Lambert State Plane Coordinate System, Oregon North Zone. Basis of bearing for all measures shall be taken from the City Photogrametric Control Network.
    b. All vertical survey measurements and elevations shall be made with reference to the vertical datum as defined in ***Section 1.10***.
    c. Horizontal and vertical control stations used as a basis of project control shall be prominently provided on the cover sheet.
5. Existing and proposed topography contours shall cover the entire site and, whenever practicable, a minimum of 50-feet beyond the site boundary. Existing topography should be screened. Topography contour intervals shall be shown at:
    a. 2-foot for slopes less than 10%
    b. 2-foot for slopes between 10% and 40%
    c. 5-foot for slopes greater than 40%.
6. All division or phase lines shall be indicated showing proposed limits of construction.
7. Label all streets with City of Fairview names.
8. All final design sheets shall include the professional engineer's seal, signature, address, and phone number placed in the title block area.

1.55.05 Text Styles

All .dwg CAD files submitted to the City shall use the following native AutoCad 2002 text fonts. CAD files submitted as .dxf files must emulate these styles. No custom or proprietary fonts shall be submitted without prior approval. Use ROMANS as the primary font. Minimum plotted height is 0.10-inch on "D" size drawing. The maximum oblique angle allowed is 8º. Use only 0 or 8º.

Application: The City requires the "STANDARD" text style be used in the following instances:

1. Text notes used for information regarding
    a. Benchmark locations
    b. Notification contacts
    c. General and erosion control construction notes
2. Construction notes on plan/profile drawings
    a. Text used in details
    b. Attention to utility conflicts
    c. Connection to existing facilities
    d. Identification of topographical features
    e. A notation referencing details, sections, sheets in bubbles, etc.
    f. Existing and proposed utility identification
    g. Utility feature
    h. Size of diameter
    i. Material
    j. Slope
    k. Privately maintained conveyance
    l. Dimension text styles
    m. Custom created detail notes, dimensions, text, etc.

These are some of the instances you would use the "STANDARD" text style, but certainly not all.

Minimum plotted text height of all text must be 0.10-inch when plotted for submittal on the 22-inches x 34-inches.

1.55.06 Required Sheet Information

Construction plan submittals shall contain the following minimum sheets: Title Sheet (unless not required by the City), Composite Utility Plan, Erosion Prevention & Sediment Control, and Tree Removal Plan.

Title Sheet:
All subdivision projects and multiple sheet improvement projects shall have a title sheet as the first page of the construction plans. This sheet shall contain the following minimum information:

1. Site plan of entire project with street right-of-way and/or subdivision layout at a 1” = 100’ scale. A 1” = 200’ scale may be used if project size is too large. The site plan shall also be a composite utility plan showing all properties served by proposed sewer, water, and storm facilities, in addition to the proposed facility.
2. Vicinity map at a 1" = 1000' scale or greater.
3. Index of sheets.
4. Complete legend of symbols used.
5. General and construction notes pertinent to project.
6. Datum, as defined in ***Section 1.10*** and temporary and/or permanent benchmarks used along with their descriptions, and elevations of benchmark.
7. Engineer's name, address, phone number, and seal.
8. Developer's/owner's name, address, and phone number for privately financed public improvements.
9. Statement referencing City of Fairview Standard Specifications.
10. Provide contact phone number for all affected utility companies and pertinent City personnel.
11. Show tax lot numbers or lot and block designations.

Erosion Prevention & Sediment Control and Tree Removal Plan:
The erosion control plan shall address the measures as required by the City’s Erosion Prevention & Sediment Control Manual (EPSC). Construction projects anticipating construction activity between October 1st and May 31st will be required to submit a plan addressing “wet weather” measures as outlined in the EPSC Manual. Construction activity is assumed as “active” until permanent vegetation and/or erosion protection is established. The plan shall include existing contours at 2-foot intervals or as approved by the City, including location of erosion control facilities (e.g., silt fence, straw mulch, sediment ponds, etc.); inlet and outlet structures (e.g., catch basins, culverts, creeks, etc.); and existing public and private utilities. All trees with 8-inch and larger diameters shall be shown on the plan. The plan shall identify the location, caliper, and species of the tree and shall indicate if the tree is proposed to remain or to be removed.

Plan Sheet:
All plans shall use elevations based on the datum as defined in ***Section 1.10***.
The plan view of each sheet shall be drawn at the appropriate scale showing the following minimum information:

1. Adjacent street curbs, property lines, right-of-way lines, utility easements referenced to property lines, street centerlines, and intersections. Show property corner and curb elevations to determine water service level, serviceability of lot/property for sanitary sewer, points of disposal for building storm drains, and how new curbs will join to existing curbs.
2. Location of all underground utilities within 100-feet of project (if they are affected by the project), existing power/telephone poles and guy anchors, valves, manholes, catch basins,

fire hydrants, meter boxes and vaults, signs, etc.

3. Location of all water courses, railroad crossings, culverts, bridges, large water transmission pipes and wastewater systems, and/or storm drains within 200-feet of proposed wastewater system and storm drain extensions if they affect the design of the project. All watercourses shall show the 100-year flood plain as indicated on the U.S. Army Corps of Engineers and Federal Emergency Management Agency (FEMA) maps.
4. On wastewater and storm drain plans, each manhole, catch basin, and cleanout shall be numbered and stationed. Stationing shall tie to existing street monuments, property corners, or manholes. Each line shall be stationed continuously on the plan sheet. Each separate line shall be separately designated (e.g., wastewater line "A", storm line "A", etc.).
5. On plat sheet, horizontal stationing shall show points of tangency and curvature for centerline; curve data shall show tangent length, radius distance, centerline curve length, and delta angle. Centerline intersection stationing, in both directions, shall be shown.
6. Where streets are being widened, edge of pavement elevations shall be shown to determine pavement cross-slope to new curb or pavement edge.
7. On water plans, all fittings and valves shall be shown and identified by type (i.e., MJ x MJ, FLG x MJ, etc.); fire hydrants shown; intersection details for valves and fittings are required when scale of plans is smaller than 1" = 20' (i.e., 1" = 40').
8. Where elevation contours are shown, they shall use elevations based on the datum as defined in ***Section 1.10***.

Profile Sheet:

All profiles shall use elevations based on the datum as defined in ***Section 1.10***. Profiles for construction plans shall be the same horizontal scale as the plan sheet. Where profiles are drawn on the same sheet as the plan view, the profile shall be immediately below the plan view. Stationing shall be continuously upgrade from left to right with lower stations to the left. The following minimum information shall be shown:

1. For waterlines, show all locations of fittings, valves, and fire hydrants with each having size and stationing call-outs.
2. For wastewater systems and storm drains, show locations of manholes, catch basins, and cleanouts, with each numbered and stationed as indicated in item 4 of the Plan Sheet requirements.
3. Existing profile at centerline of proposed utility or street, plus, whenever practicable, 100-feet each direction from end of proposed street.
4. Proposed profile grade, as appropriate, for all wastewater systems, storm drains, and waterlines, giving pipe size, length between structures or fittings, slope, backfill and pipe material, sewer inverts, rim elevations, etc.
5. Existing and proposed underground utility that crosses the alignment of the proposed facility.
6. Beginning of all vertical curves, points of vertical intersection, end of vertical curve, low point of sag curve, high points, and length of vertical curve. Whenever practicable, profiles of existing centerline grade shall extend a minimum of 250-feet beyond the end of the improvement.
7. Clearly show all potential conflicts with existing public and private utilities (i.e., pipes, conduits, vaults, cathodic protection systems, etc.) that impact proposed design.

City as-builts are only to be used as an aid to the Engineer of Record. When a potential conflict may occur, the Engineer of Record shall field locate, or cause to be located, and verify the alignment, depth, and inverts of all existing facilities shown on the plans that will be crossed by the proposed facility.

Detail Sheets:
Standard Details shall be included on a separate sheet(s) with all construction plans. If a Standard Detail, such as sewer manholes, must be modified to fit existing or unique conditions, the modified drawing shall be marked accordingly on the detail. When appropriate due to required detail complexity or if a standard detail does not exist, a separate detail sheet shall be drawn.

1.60 AS-BUILT REQUIREMENTS

For all public works improvements the Engineer of Records hall submit certified as -built drawings for all plans that were approved for construction within 3-months of the completion of construction. As-built drawings shall meet the City drawing requirements and this subsection and shall be of archival quality. At a minimum, the drawings shall be 4-mil Mylar with permanent, UV resistant marking medium. Original inked Mylars may also be submitted in lieu of photographic Mylars.

The Engineer of Record shall be responsible for as-built surveying of the project to incorporate information including, but not limited to, ends of sewer laterals, manhole locations, and depths of pipes at manholes for inclusion in as-built drawings, and shall submit, along with the as-built drawings, a statement certifying that all work for which plans were approved has been completed in accordance with the Fairview Public Works Standards specifications.

The words "As-built Drawing" shall appear as the last entry in the revision block along with the month, day, and year the as-built drawing was prepared.

All sheets that were part of the original, approved design plan set shall be submitted as part of the as-built drawings, including title and detail sheets.

As-built Drawings must include all private and public easement information.

NOTE: Actual location and depth from finish grade of any other utilities encountered du ring construction shall be shown and noted on both plan and profile of the as-built plans.

1.60.01 Streets

The following minimum information shall be noted on street as-built drawings:

a. Change in horizontal alignment, curve data, and stationing of primary control points (e.g., PC, PI, PT, PRC)

b. Vertical curve or grade changes; change in location of low point in sag vertical curve

c. Change to approved thickness for street structural section components. Show station limits where changes in structural section have occurred

d. Change to driveway locations or widths

e. Other change altering the approved plans

1.60.02 Storm Drains

The following minimum information shall be noted on storm drain as-built drawings:

a. Station of connection into main line; tie end of branch line to nearest property corner at right-of-way line and distance back from the face of curb

b. Show alignment changes, grade changes, and changes in construction materials; if changed alignment results in station changes, a station equation shall be shown as appropriate at a manhole

c. Other change altering the approved plans

1.60.03 Wastewater

The following minimum information shall be noted on sanitary sewer as-built drawings:

a. Station of wye or tee into main line; tie end of service lateral to nearest property corner at right-of-way line and distance back from the face of curb

b. Depth at the end of service lateral measured from existing ground to invert of pipe; when required by the Engineer, invert elevations shall be noted

c. Length of service lateral measured from centerline of sewer main to end of pipe

d. Show alignment changes, grade changes, and changes in construction materials; if changed alignment results in station changes, a station equation shall be shown as appropriate at a manhole

e. Other change altering the approved plans

f. Provide complete test results to the Project Manager

g. Type of pipe, backfill material, and location

1.60.04 Water Main

The following minimum information shall be noted on water main as-built drawings:

a. Station and/or property line/corner to valves (not at standard location), all fittings, blow-offs, and dead-ended lines

b. All changes from standard 36-inch depth cover; limits shall be shown on plan with annotated reason for change; actual pipe elevation (top of pipe) will be taken at every fitting that is not at standard cover

c. Show alignment changes, grade changes, and changes in construction materials; if changed alignment results in station changes, a station equation shall be shown as appropriate at a fitting

d. Provide manufacturer of all valves; identify types of fittings (e.g., MJ x MJ, FLG x MJ, et c.); provide in formation in the form of an inventory list on construction drawings

e. Other change altering the approved plans

f. Provide design calculations and complete test results to the Project Manager

g. Actual location depth, from finish grade of street, of any other utilities encountered during construction.

Table of Contents

2.00 – STORMWATER DESIGN STANDARDS 21
2.05 MINIMUM DESIGN CRITERIA 21
2.10 FLOODPLAIN INFORMATION 24
2.15 DOWNSTREAM ANALYSIS REPORT 24
2.20 CULVERTS 25
2.25 STORMWATER DETENTION/RETENTION 25
2.30 WATER QUANTITY STANDARDS 28
2.35 ALIGNMENT AND COVER 28
2.40 STRUCTURES 29
2.45 PIPE MATERIALS AND SIZE 31

2.00 – STORMWATER DESIGN STANDARDS

In general, storm drain systems should be designed to care for future loads, which may reasonably be expected from full upstream development consistent with the Portland Stormwater Management Manual, 2016. Storm drainage systems shall extend to the appropriate extremities of the project to provide for both upstream and downstream development of the system.

All new systems and extensions of existing systems shall be designed only on the basis of separate storm drains and sanitary sewers. Combined sewers will not be approved.

Wherever practicable, storm drain connections will be made directly into existing manholes. Construction of a manhole over the existing storm drain may be required. Tee connections may be allowed from single inlets or single area drains if the existing storm drain is 36 inches in diameter or larger. In any case, the sole determination of the type of connection will be made by the City.

All storm drainage systems proposed for public ownership and maintenance shall be located only within public Rights-of-Way or easements designated for their use. Easements will be accepted by the City for permanently constructed storm drains only.

House or Building Storm Sewers:

a. As a minimum criterion, construction of the house or building storm sewers shall be of the same quality and meet the same requirements as the public storm sewer with regard to materials, water tightness, and location. In addition, these sewers shall conform to the State and local plumbing codes and restrictions. No roof, surface, foundation or other stormwater drain lines shall be connected to the public sanitary sewers.

b. All roof drainage not approved for dry well disposal must flow through curb outlets into gutter, or directly into public storm sewer or into an approved, well defined natural channel.

All private storm sewer systems over 250 ft. in length or 8 inches in diameter, or larger, shall comply with all applicable requirements of public sewers.

2.05 MINIMUM DESIGN CRITERIA

Storm Frequency – All public storm drain systems shall be designed for the design storm recurrence interval in the following table:

DRAINAGE SYSTEM DESIGN CAPACITY		
Drainage System Element		
Minor:	Streets, curbs, gutters, inlets, catch basin, and connector drains.	10
Major:	Laterals (collectors) < 250 tributary acres	25
	Trunk > 250 tributary acres	50*
	Arterial Streets and the Drainage System in or under Arterial Streets	50

Watercourses	Without designated floodplain	50
	With designated floodplain	100
Bridges:		100
Detention Facilities:	Storage volume (onsite)	25
Storage Volume		100
	Discharge rate	Function of downstream capacity
Retention Facilities:	Drywell infiltration capacity	25**

* Surcharged conditions for pipe systems and culverts and bank-full conditions for open ditches and channels are acceptable only for demonstrating the adequacy of the conveyance system to convey the peak runoff for the 25 or 50-year design storms (as required) provided that:

a. runoff is contained within defined conveyance system elements; AND
b. the hydraulic grade line does not exceed the elevation of the roadway subgrade; AND
c. No portions of a building will be flooded.

**Maximum allowable design capacity = 1200 GPM = 2.67 CFS per drywell.
Conveyance system adequacy shall be demonstrated by performing a backwater analysis.

1. The following requirements shall be used for the design of storm sewer systems under the jurisdiction of the City:

i) All appurtenances (inlets, catch basins, and the like) shall be designed to accept the 10 year storm event. The grates to these appurtenances shall, as far as practical, be designed to be self-cleaning to avoid failure due to accumulation of debris such as leaves.

ii) The conveyance system (pipe. culverts, channels, and the like) shall be designed to convey the *25-year, 24-hour* design storm. This design shall be supplemented with an overland component demonstrating how up to a 100 year event will be accommodated. This overland component shall not be allowed to flow through or inundate an existing building.

iii) Closed conveyance systems shall be designed to operate under gravity flow and shall not be designed to operate under pressure flow.

iv) The minimum design service life for storm sewer materials under pavement sections shall be 100 years. The minimum design service life for storm sewer materials which are not covered by pavement sections shall be 50 years.

v) Open channel conveyance systems incorporating water quality treatment, riparian habitat improvement, and emergency overland flood relief shall be utilized to the maximum extent practicable.

2. All developments shall address on-site and off-site drainage concerns, both upstream and downstream of the project, including but not limited to:

i) Modifications to the existing on-site storm drainage systems shall not restrict flows so that backwater effects are created at upstream, off-site properties to levels greater than the existing situation.

ii) Stormwater conveyance systems within a project site that convey stormwater runoff from a contributing drainage basin upstream of the development, shall be designed and constructed to accommodate all flows from the "design storm" from the contributing drainage area based upon the projected full buildout of that contributing drainage area. The conveyance systems shall be fully compatible with existing downstream conveyance elements and flow conditions.

iii) Modifications to the existing on-site storm drainage systems shall not increase bank erosion or water surface elevations at downstream, off-site properties.

3. The methodology set forth in the Oregon State Highway Division, Hydraulics Manual, January 2014, Chapters 3, 7, 8 and 9 shall be followed when calculating flow capacities for open channels, culverts and closed storm sewer systems. Where provisions of this chapter conflict with Hydraulics Manual, this chapter shall take precedence.

4. A copy of the calculations and worksheets used to complete the hydraulic analysis for the development site shall be submitted with the drainage plans for approval.

5. Engineers are cautioned not to oversize pipes in an effort to comply with the minimum velocity requirements. 3 ft. per second velocities must be achieved with the design flow, not the capacity of the pipe. The grade will depend upon the geometry and roughness of the conduit.

Time of Concentration: Overland flow of runoff to the initial catchment point into the storm drain system shall be a minimum of 10 minutes.

Velocity and Slope: All storm drains shall be on a grade that produces a mean velocity, when flowing full, of at least 3-feet per second.

Velocity in Natural Channels: Control of discharge from developed areas to natural channels shall be such that the average velocity resulting from all design storms less than or equal to the 10-year event remains below the erosive velocity of the channel.

Manning’s Equations: When calculating minimum pipe slopes and velocities, the design engineer shall use the Manning pipe friction formula.

Pipe Coefficient: The storm drainpipe roughness coefficient to be used in the Manning formula shall be not less than 0.013.

Stormwater Flows: Several methods are available to engineers for estimating peak runoff rates. Three of these are the “Rational Method”, the SCS “Curve Number” method, and the Santa

Barbara Urban Hydrograph (SBUH) method. These methods will be acceptable for estimating the peak runoff rates to be used in sizing storm drainage conveyance improvements in those areas for which there are no specific master plan recommendations.

Detention Volumes: Several methods are available for the calculation of runoff rate volumes for the purpose of calculating detention/retention storage volume requirements. Detention volume estimates shall be based on hydrographs developed for the storm duration specified by the City for the applicable return frequencies. A method shall be used that routes the design hydrograph through the proposed detention system. Unless specified otherwise, the standard design storm duration shall be 24-hours. For development of the appropriate hyetograph(s), the SCS Type 1A 24-hour rainfall distribution is currently being accepted for all development submittals. If necessary, that distribution may be obtained from the City. A table of 24-hour rainfall depths for storms with 2, 5, 25, and 100-year recurrence intervals is also available from the City. For methods based on the SCS "curve number" approach, the City provides a table of the SCS soil types found within the City along with their respective hydrologic soil groups. A second table is available associating runoff curve numbers (CN) with the hydrologic soil groups and a variety of land uses. This table is intended as guidance only. The Rational Method, or other "intensity based" methods shall not be used to establish storage volume calculations or allowable release rates for detention facilities.

2.10 FLOODPLAIN INFORMATION

Floodplain information, delineating the floodway and 100-year floodplain limits, shall be shown where it occurs within the development. Floodplain limits shall be elevation based

2.15 DOWNSTREAM ANALYSIS REPORT

The downstream analysis will show what impacts, if any, a project will have on the hydraulic conveyance system(s) downstream of the project site. The analysis is to be divided sequentially into 3 parts. The 3 parts include: (1) review of resources, (2) inspection of the affected area, and (3) analysis of downstream effects.

(1) During the review of resources, the Engineer of Record must review any existing data concerning drainage of the project area. This data will commonly include area maps, floodplain maps, wetland inventories, stream surveys, habitat surveys, engineering reports concerning the entire drainage basin, inventories of known drainage problems, and previously completed downstream analyses. The City may be able to provide most of this information. Other sources of information include, Oregon Department of Environmental Quality, Oregon Division of State Lands, Department of Fish and Wildlife, and other local agencies.

(2) During the inspection of the affected area, the Engineer of Record must physically inspect the drainage system at the project site and downstream of the site. During the inspection, the Engineer of Record should investigate any problems or areas of concern that were noted during the review of resources. The Engineer of Record should also identify any existing or potential capacity problems in the drainage system, any existing or potential areas where flooding may occur, any existing or potential areas of channel destruction (including erosion and sedimentation), and existing or potential areas of significant destruction of aquatic habitat.

(3) During the analysis of downstream effects, the information that has been gathered must be analyzed to determine if construction of the project will create any drainage problems downstream or will make any existing problems worse. Often, if the other minimum requirements are met, the project will not negatively impact the downstream drainage system. There are however some situations that, although minimum requirements have been met, will

still have negative impacts. Whenever a situation is encountered where it has been determined that there will be negative impacts resulting from the project, mitigation measures must be included in the project to correct for the impacts.

2.20 CULVERTS

Culverts at road crossings in natural perennial channels shall be designed to pass the peak discharge for the 25-year design storm such that the headwater water surface elevation:

a. does not exceed 1.5 times the culvert diameter; OR
b. remains at least 1 foot below the roadway subgrade, whichever is less

Water crossing structures on all creeks and tributaries shall be constructed and maintained so as to not impede or eliminate a native fish species' access to habitat or ability to migrate. Proposed culvert crossings, regardless of tributary size, intermittent or perennial, shall conform to Oregon Department of Fish & Wildlife and National Marine Fisheries Service's regulations and stream crossing guidelines.

2.25 STORMWATER DETENTION/RETENTION

1. The developer of each new development is responsible for mitigating the impacts of that development upon the public storm water" system. The development may satisfy this requirement by:
    a. Construction of on-site stormwater quantity detention facilities designed in accordance with the Portland Stormwater Management Manual, 2016; or
    b. Enlargement or improvement of the downstream conveyance system in accordance with the Portland Stormwater Management Manual, 2016.
2. The City will determine whether an on-site stormwater detention facility shall be constructed.
3. On-site stormwater detention facilities may be constructed when any of the following conditions exist:
    a. There is an identified downstream deficiency and detention rather than conveyance system enlargement is determined to be the more effective be solution.
    b. There is an identified regional detention site within the boundary of the development.
    c. There is a site within the boundary of the development which would qualify as a regional detention site under criteria or capital plan adopted by the City.

2.25.01 Development not requiring Detention

In general, developments meeting the following criteria will not be required to provide detention:

a. Partitions
b. Multi-family developments of less than 4 units
c. Commercial and industrial development where the construction of a new facility or expansion of an existing facility will not increase the impervious area by 5,000 square feet or more.

2.25.02 Detention Volume

When detention is required or downstream facilities are inadequate, the volume to be detained will be designed to capture runoff so the runoff rates from the site after development do not exceed the predevelopment conditions for the 2-, 10-, and 25-year, 24 hour return storms.

When required because of an identified downstream deficiency, stormwater quantity on-site detention facilities shall be designed such that the peak runoff rates will not exceed predevelopment rates for the specific range of storms which cause the downstream deficiency, up

to a maximum of 2-, 10-, 25-, 50-, and 100-year storms.

Construction of on-site detention shall not be allowed as an option if such a detention facility would have an adverse effect upon receiving water in the basin or sub-basin in the event of flooding, or would increase the likelihood of severity of flooding problems downstream of the site.

The design storm hydrograph necessary to support detention design shall be based on the Santa Barbara Urban Hydrograph method or approved equivalent.

2.25.03 Emergency Overflow

The Engineer of Record shall assess the impacts of system failure for onsite detention. Overflow may occur due to rainfall intensity that exceeds the design storm, debris blockage of storm drain system, or some other reason.

If a system overflows it shall not cause inundation of neighboring properties. Potential overflow routes shall be protected from erosion and/or structural failure by adequate means.

If surface detention (e.g., detention/retention pond) is used, an overflow system shall be included to provide controlled discharge of the 100-year, 24-hour design storm event for developed conditions, without overtopping any part of the pond embankment or exceeding the capacity of the emergency spillway. The overflow design shall assume failure of the normal outlet control structure. An emergency spillway shall be able to safely pass all flows over the pond embankment without overtopping the embankment. Sufficient armoring will be required to the toe on each face of the embankment to prevent failure of the embankment from erosion.

2.25.04 Detention Facility Design

There are generally 2 types of detention facilities – surface storage (e.g., ponds) and piped systems (or a combination thereof). While the City prefers surface storage systems, either type may be used.

Detention facilities shall not be considered sedimentation facilities unless the following minimum requirements are met:

a. The sediment control portion of the facility must be either a separate pond or structure, or a separate “cell” or element that is isolated from the high flows generated by larger storms that could flush accumulated material back into the stormwater system or channel.
b. Separate calculations shall be submitted demonstrating the designed performance of the sedimentation element. Information must include an explanation of the function of the facility, the required live and dead storage volumes, detention time, and projected frequency of maintenance.

2.25.05 Infiltration Facility Design

When infiltration groundwater recharge disposal of stormwater is proposed, the following shall be submitted for review:

a. Soil Logs – A minimum of one soil log per acre. Each soil log shall extend to a depth of at least 5-feet below the bottom elevation of the proposed infiltration facility or to the seasonal water table elevation.
b. Infiltration Tests – The results of infiltration tests which have been performed in accordance with City requirements and procedures in this subsection.
c. Engineer’s Opinion – The written opinion of a qualified soils engineer that the site is capable of supporting a functional infiltration system that will meet the design

requirements for the development being proposed. Any requirements related to steep slope, landslide hazard, or other sensitive area impacts shall also be addressed in the report.

The design infiltration rate for infiltration systems shall be limited to half the percolation rate. Percolation rates shall be tested on-site for all soils. The tests may be waived if the engineer working for the developer presents credible test results from nearby (less than 1/4 mile) properties. In those cases, a representative drywell shall be tested after completion of the stormwater improvements to verify assumed infiltration rates. The test results shall be submitted to the City, prior to acceptance of the stormwater facilities.

A copy of the calculations and worksheets used to complete the on-site detention analysis for the development site shall be submitted with the drainage plans for approval.

Infiltration facilities shall not be allowed outside of the City's designated sump area within the City. Maps of this area are available upon request.

In addition to all other applicable requirements, the approval of infiltration groundwater recharge stormwater disposal systems requires the performance of one or more percolation tests. The number and location of these tests will be dependent upon the size and location of the subject property, and shall be submitted to the City for review prior to testing. All test measurements shall be made during the period when groundwater level is expected to be at its maximum. All tests made for the purpose of approval of infiltration systems shall be performed under conditions in which the surrounding soil is saturated, or nearly so. The infiltration rate test procedure shown below simulates this condition. All tests shall be conducted in accordance with this procedure.

Maximum Infiltration Rate Test
This test is used to determine the maximum subsurface infiltration rate for the purpose of designing infiltration systems such as drywells and infiltration trenches, ponds, or vaults. The purpose of the procedure is to ensure the simulation of actual conditions that occur during storms, including the saturation of the surrounding soil.

1. An excavation shall be made to the bottom elevation of the proposed infiltration system. The maximum infiltration rate shall be determined using either the EPA falling head percolation test procedure (Design Manual – Onsite Wastewater Treatment and Disposal Systems, EPA, 1980) or the double ring infiltrometer test (ASTM D3385).
2. The test hole or apparatus is filled with water and maintained at depths above the test elevation for a period of not less than 4-hours. This represents the saturation period.
3. Following the saturation period, the infiltration rate shall be determined in accordance with one of the test procedures specified above with a head of 6-inches of water.
4. The Engineer shall perform at least 2 tests per acre to determine a representative infiltration rate for the site. The measured rate shall have the following factors of safety applied:

    a. EPA Method Factor of Safety = 2.0
    b. ASTM D-3385 Factor of Safety = 1.75

    All newly constructed stormwater drywells (sumps) shall be tested prior to paving in order to determine their in-place capacity. Testing of both new and existing drywells shall follow the procedure outlined below:

a. Fill sump with water at an initial rate equivalent to the minimum required flow rate for the sump, or 300 GPM, whichever is less, and record the water surface elevation below the sump rim after 5-minutes. Maintain the initial flow rate recording the water surface elevation every 5-minutes until it stabilizes.
b. After the water surface elevation stabilizes, increase the flow rate by 300 GPM and record the water elevation as in Step 1.
c. Repeat Step 2 until:

    i. Sump has reached the design capacity; or
    ii. Sump has reached the maximum allowable capacity for a single drywell; or
    iii. Sump has reached its actual in-place capacity; or
    iv. Maximum flow rate from the water source has been reached.

    (Note: The minimum peak inflow for a test to be considered valid shall be 600 GPM unless this exceeds the design capacity of the sump.)

d. Cease discharge of water to the sump and record the water surface elevation every minute until the sump is empty or the water surface has remained constant for a period of 5-minutes.
e. Provide the City with all recorded test data within 24-hours following the test.
f. If, following analysis of the test data, the tested capacity of the drywell is less than the design capacity, contact the City immediately.

The City must be notified at least 24-hours prior to conducting the test. Only clean water shall be delivered to the sump or sedimentation manhole for testing. The introduction of silts, sediments, gravels, or any other foreign material shall not be permitted.

2.30 WATER QUANTITY STANDARDS

The City of Portland 2016 Stormwater Management Manual shall be used to size stormwater quality facilities. Where provisions of this chapter conflict with the Portland 2016 Stormwater Management Manual or other cited references, this chapter shall take precedence.

All projects shall provide water quality control of stormwater runoff m accordance with the requirements of this section.

Natural drainage flow routes through streams shall be maintained, and discharges from the site shall occur at the natural location and elevation, to the maximum extent practical.

Transfer of runoff from one basin to another shall not be allowed.

Surface water exiting a parcel shall be discharged with adequate energy dissipaters within the development site to prevent downstream damage.

All development activity creating over 2000 square feet of new impervious surface must meet the water quantity standards of this section.

2.35 ALIGNMENT AND COVER

2.35.01 Right of Way Location

Standard location in roads is 5 ft. South and/or East of centerline. Alternate locations may be approved by the City. All changes in direction of pipe shall be made at an approved structure.

Storm drain systems shall be located in the street right-of-way. If streets have curved alignments, the center of manhole shall not be less than 6-feet from the curb face.

Curved alignments in stormwater systems, vertically or horizontally, are not permitted.

2.35.02 Minimum Cover

Pipe cover above top of pipe is 36 inches minimum in streets and must be compatible with other utilities, both existing and planned. Pipe cover for the laterals from the catch basin to the manhole shall be a minimum of 30 inches.

All storm drains shall be laid at a depth sufficient to protect against damage by traffic and to drain building footings where practical. Sufficient depth shall mean the minimum cover from the top of the pipe to finish grade at the storm drain alignment.

In areas of relatively flat terrain, the design engineer must show that sufficient depth is provided at the boundary of the development to properly drain the remainder of the upstream basin area contributing to the site.

2.35.03 Relation to Watercourses

Storm drain lines shall enter a creek or drainage channel at 60° or less to the direction of flow. The outlet shall have a head wall and scour pad or riprap to prevent erosion of the existing bank or channel bottom. The size of pipe or channel being entered will govern which protective measures are required. All protective measures must conform to the requirements of Subsection 2.40.04.

2.35.04 Outfalls on Slopes

Outfalls proposed on slopes greater than 15% or greater than 20-feet in height must meet one of the following criteria:

1. The discharge must be less than 0.5 cfs; or
2. A tight-line conveyance system must be constructed to convey the runoff to the bottom of the slope with adequate energy dissipation at the bottom to protect the toe of the slope and/or the receiving watercourse from erosion.

2.35.05 Anchor Walls

Where soil conditions so warrant, sewers on slopes in excess of 20 percent shall be secured through the use of concrete anchor walls or other protection. Spacing for anchorage shall be as follows:

Slope (%)	Minimum Anchor Spacing (ft)
20-34	35
35-50	25
51+	15 or concrete encasement

2.35.06 Relation to Utilities

Crossings with other underground utilities, except at intersections, shall be avoided. Crossings, if necessary, should be at an angle greater than 45 degrees. The storm sewers and/or the utility must be structurally reinforced if insufficient clearance is available. Standard allowable clearance without reinforcing between storm ·and sanitary sewers is 18 inches.

2.40 STRUCTURES

2.40.01 Manholes

Standard location in roads is 5 ft. South and/or East of centerline. Alternate locations may be

approved by the City. All changes in direction of pipe shall be made at an approved structure.

Manholes shall be located at all changes in pipe slope, alignment, size, type, and at all pipe junctions with present or future storm drains.

Manhole spacing shall not be greater than 500-feet. The minimum inside bottom diameter shall be no less than 48 inches.

When the downstream pipe size increases, the crown of all upstream pipes shall not be lower than the crown of the larger downstream pipe.

For sewers in excess of 36 inches m diameter, special manholes may be required. Spacing may be increased for sewers in excess of 36 inches diameter.

The invert drop shall be equal to one-half the difference in pipe diameters for pipes smaller than 24-inches and 3-quarters the difference for pipes larger than 24-inches. Allow a drop of 0.1 ft. in a through manhole, 0.2 ft. in the presence of one lateral bend, and 0.3 ft. for two laterals.

2.40.02 Catch Basins

Catch basins shall be spaced to avoid overflowing of the catch basin, or unacceptable inundation of the street, as defined as pending of water 6 ft. from the curb into the street. Spacing will generally be from 200 to a maximum spacing of 500 ft., with closer spacing for slopes less the 2 percent, for streets requiring vehicular movement during rare storm events, and for other conditions requiring closer spacing.

In general, catch basins should be placed at all low points in the gutter grade and at intersections to prevent the gutter flow from crossing traffic lanes of the intersecting road. Catch basins will normally be placed upgrade from pedestrian crossings to intercept the gutter flow before it reaches the crosswalk. Where pavement surfaces are warped such as at cross streets, ramps, or in transitions between super elevated and normal sections, gutter flow should be picked up before the cross slope of the pavement begins to change in order to lessen water flowing across the roadway and to prevent icing.

Surface water drainage patterns shall be shown for each and every block.

An accepted methodology of storm drainage design is "Drainage of Highway Pavements, Hydraulic Engineering Circular No. 12," by the U.S. Department of Transportation Federal Highway Administration, Public Roads Administration, or Oregon Department of Transportation Highway Division Hydraulics Manual.

Typical catch basin construction shall be in accordance with the City’s Standard Drawings. Modified catch basin designs (combination curb opening catch basin or depressed catch basin) will be required where steep slopes or other conditions exist. Modified catch basin designs shall be approved by the City.

Catch basins shall be located at the following locations, but in no case be spaced further than 400-feet:

a. At curb returns on the upstream side of an intersection
b. At the ends of all dead-end streets with a descending grade
c. At intermediate locations so that storm flows at the curb line do not exceed 3-feet in width (measured from the curb face) or 3-inches in depth (measured at the curb face),

whichever is less

d. At the downstream end of the street improvements that abut unimproved roads or undeveloped property
e. At the upstream end of the street improvements that abut unimproved roads or undeveloped property
f. A single unit double catch basin is required at low point (sag) of all vertical curves. Refer to Standard Detail FV218. Catch basins shall be capable of intercepting completely the design storm flow at the curb.

2.40.03 Inlet Manholes

Where stormwater systems connect to the existing or proposed public stormwater system at a catch basin location, inlet manholes shall be required where any of the following apply: (a) the pipe connection is larger than 6-inches in diameter, (b) 2 or more pipes discharge to the location, or (c) the design peak flow from the onsite system exceeds 0.5 cfs.

2.40.04 Outfall Protection

The outfalls of all stormwater systems shall be adequately protected to prevent erosion of slopes and channels. All outfalls shall include, at a minimum, the erosion protection as shown in the table below.

Alternative approaches to protection may be accepted as approved by the Engineer.

ROCK PROTECTION AT OUTFALLS						
DISCHARGE VELOCITY AT DESIGN FLOW (fps)		Required Protection				
Greater than	Less than or equal to	Minimum Dimensions				
		Type	Thickness	Width	Length	Height
0	5	Riprap*	1-foot	Diameter + 6-feet		Crown + 1-foot
5	10	Riprap**	1-foot	Diameter + 6-feet or 3 times diameter whichever is greater		Crown + 1-foot
10	20	Gabion Outfall	1-foot	(As required)	(As required)	Crown + 1-foot
20	----	Engineered energy dissipater required				
Riprap to be reasonably well graded with the following gradation: * Maximum stone size = 8-inches ** Maximum stone size = 24-inches Median stone size = 6-inches Median stone size = 16-inches Minimum stone size = 2-inches Minimum stone size = 4-inches						

2.45 PIPE MATERIALS AND SIZE

All public storm drains shall be constructed with either concrete or HDPE smooth interior, corrugated exterior pipe as specified in the Construction Standard Specifications. Where required, for added strength, Class 50 or greater ductile iron pipe will be used. Concrete pipe strength shall meet the applicable sections of ASTM C-76.

Private storm drainpipe shall meet the appropriate sections of the Uniform Plumbing Code.

All public storm drain main lines and lateral lines to catch basins and other inlet structures shall be a minimum of 12-inches in diameter, except that storm drain lines that convey water directly from private property may be a minimum of 6-inches in diameter if they do not extend into the roadway. All lines must discharge into a drainage structure of the public system and at a location and elevation approved by the City.

Storm drains 24 inches or less shall not be reduced in diameter when the slope in the ensuing section is increased. Under unusual conditions, with the approval of the City, pipes greater than 24-inches may be reduced as necessary due to increase in slope, but in no event will they be reduced below 24 inches.

Table of Contents

3.00 – WASTEWATER DESIGN STANDARDS 34
3.05 WASTEWATER PLANS.....35
3.10 PIPE MATERIALS AND SIZE 35
3.15 MINIMUM DEISGN CRITERIA.....35
3.20 ALIGNMENT AND COVER.....38
3.25 SEPARATION WITH WATERLINES 39
3.30 RELATION TO WATERCOURSES.....39
3.35 MANHOLES.....40
3.40 CLEANOUTS 41
3.45 SEWER LATERALS 41
3.50 CONECTIONS TO EXISTING SEWERS 42
3.55 PRIVATE SEWER LINES.....42
3.60 SUBSURFACE DISPOSAL.....43
3.65 WASTEWATER PUMP STATION DESIGN STANDARDS.....43

3.00 – WASTEWATER DESIGN STANDARDS

Performance Standards – Wastewater system design shall meet the policies and guidelines of the latest Sewerage System Master Plan and its updates.

Wastewater systems shall be designed to provide gravity service to all areas of development.

Wastewater system capacity shall be designed for ultimate development density of the contributing area. The system shall allow for future system extension and for future development based on current and on proposed land use designations.

Wastewater systems shall be designed to remove the domestic wastewater and industrial wastes from basements of houses where practical, commercial or industrial buildings, and all public and private establishments where possible. Basement drainage by gravity flow shall be provided wherever practicable.

Stormwater, including street, roof, or footing drainage, shall not be discharged into the wastewater system but shall be removed by a system of storm drains or by some other method separate from the wastewater system.

Unpolluted or non-contact cooling waters shall not be discharged into wastewater systems. The overflow drains and filter backwash lines of swimming pools and "hot tubs" shall drain into a wastewater system.

In general, wastewater systems shall be designed to allow for future loads and for ultimate development of the specific drainage area or basin based on current and on proposed land use designations. Sewer systems shall extend to the appropriate extremities of the project to provide for both upstream and downstream development of the system.

As a condition of wastewater service, all developments will be required to provide public wastewater systems to adjacent upstream parcels in order to provide for an orderly development of the drainage area. This shall include the extension of wastewater mains in easements across the property to adjoining properties, and across and along the street frontage of the property to adjoining properties when the main is located in the street right-of-way. This shall include trunk lines that are sized to provide capacity for upstream development.

All public wastewater systems shall be located within the public right-of-way whenever possible. Under special topographical conditions, the placing of public wastewater systems outside of public right-of-way may be approved by the City. When system access facilities such as manholes and cleanouts are constructed beyond access from the roadway, a heavy vehicle accessway shall be provided.

Design shall comply with Oregon Department of Environmental Quality sewer design guidelines, **OAR 340, Division 52**.

For any project requiring construction within or adjacent to watercourses and/or wetlands, in addition to approval by the City, permits from the appropriate responsible agencies (Oregon Department of Fish and Wildlife, Oregon Division of State Lands, U.S. Army Corps of Engineers, U.S. Fish and Wildlife Service, U.S. National Marine Fisheries Service, etc.) shall be obtained. Copies thereof, or written evidence that no permit is required shall be given to the City prior to any clearing or construction.

A copy of the calculations and worksheets used to determine design compliance of the sewer system within the development, the future upstream incoming influent, and the adequacy of the downstream facilities shall be submitted with plans for approval.

The minimum design life for sewer materials shall be 75 years.

High ground water table is prevalent in many areas of the City; therefore excessive ground water infiltration will occur unless extreme care is taken in the laying and jointing of sewer lines. It is necessary that the amount of infiltration be kept as low as possible. For this purpose, the sewer specifications shall cover in detail the method of laying pipe and constructing joints. Strict supervision should be provided during construction to make certain that the specifications are complied with.

City wastewater pre-treatment requirements must be adhered to. The owner/developer should verify through the City any additional requirements other than those specified in previous sections.

3.05 WASTEWATER PLANS

In addition to the requirements of ***Section 1.00 (GENERAL TECHNICAL)*** of these Design Standards, the following requirements shall apply to plans for public wastewater system improvements: Whenever practicable the plan and profile sheets shall show the topographic information required by ***Subsection 1.50.02 (Facility Plan)*** of the Design Standards for a minimum of 200-feet upstream of the proposed end of any extendable mainline sewer.

3.10 PIPE MATERIALS AND SIZE

All public wastewater systems shall be constructed with ASTM D-3034, SDR35 PVC pipe as specified in ***Section 301 (WASTEWATER SYSTEMS)*** of the Construction Standard Specifications. Where required for added strength, AWWA C-900, or AWWA C-905, PVC Pipe, or ASTM C-76 reinforced concrete pipe shall be used. Class 50 ductile iron pipe will be used when added strength is needed and pipe wall thickness is limited or when pipe cover is less than 3 ft.

Solid wall HDPE pipe may be used in boring, jacking, pipe bursting, and other similar applications when approved by the City. Private sanitary sewers shall meet the appropriate sections of the Uniform Plumbing Code.

All public wastewater main lines shall be a minimum diameter of 8-inches.

Minimum diameter of pipe used in house or building connections within the Right-of-Way or easement is 4 inches.

3.15 MINIMUM DEISGN CRITERIA

Design Values – If there are no specific project values for the amount of sewage to be generated (Uniform Plumbing Code flows), the following design values shall be used:

Land Use Designation	**Net Density (Dwelling Units/Acre)**	**Net Population (People per Acre)**	**Daily Wastewater Flow (Gallons/Day/Acre)**
LDR	8.71	19.2	1,533

TLDR	20.00	44.0	3,520
MDR-12	12.10	26.6	2,130
MDR-24	24.20	53.2	4,259
OFR	12.10	26.6	2,130
BP	1.00	2.2	176
LI	2.18	4.8	384
HI	2.18	4.8	384
NC	4.36	9.6	767
GC	4.36	9.6	767
RTC	40.00	88.0	7,040
SC	60.00	132.0	10,560
SC-RJ	60.00	132.0	10,560
CMF	24.00	52.8	4,224
CMU	24.00	52.8	4,224
CC	40.00	88.0	7,040
MC	40.00	88.0	7,040
CUC	60.00	132.0	10,560
DT	60.00	132.0	10,560
DR-12	12.00	26.4	2,112
DR-30	30.00	66.0	5,280
DC-1	30.00	66.0	5,280
DC-2	30.00	66.0	5,280
TDM-C	60.00	132.0	10,560
TDH-C	60.00	132.0	10,560
HDR-C	60.00	132.0	10,560
MDR-C	30.00	66.0	5,280

In addition to the wastewater flows in this table, an allowance of 1,000-gallons/day/acre shall be added for all the land area in the basin being served to account for inflow and infiltration (I & I).

A peaking factor shall be applied to the daily wastewater flow. The peaking factor shall be 3.0.

The wastewater design flow in gpd is then calculated as: Acres * (1,000 + DWF * 3.0) where DWF = Daily Wastewater Flow in gpd/acre from table above.

Velocity – All wastewater pipes shall be designed at a grade that produces a mean velocity of the wastewater design flow of no less than 2-feet per second and not more than 15-feet per second. If topography requires a grade that would result in a velocity greater than 15-feet per second in one pipe section, additional drop manholes shall be installed as required by the City.

The velocity shall be calculated using the wastewater design flow for the basin to be served now and at ultimate design flow in the future.

Size – The pipe size shall be based on the minimum size needed for the design flow and not the size needed to result in a desired slope. The pipe size shall be determined by using one-half of the maximum gravity flow capacity of the pipe for pipes 15-inches in diameter and less, and shall be two-thirds for pipes larger than 15-inhes in diameter.

The Engineer of Record shall submit his calculations for each wastewater line to be installed, exclusive of sewer laterals.

Manning's Equation – When calculating volumes, slopes, and velocities, the Engineer of Record shall use the Manning pipe friction formula.

V = (1,486/n) * (R^(2/3)) * (S^(0.S))

Where:	V	=	Q/A = 2 ft./Minimum 1 sec
	n	=	0.013 Minimum
	R	=	Hydraulic Radius, ft
	S	=	Slope, ft/ft

Minimum Slope – For verification purposes the following table of minimum pipe slopes shall be used. The slopes shown are for informational purposes only. The actual slopes shall be determined by the actual wastewater design flow.

All sanitary sewers should be laid on a grade which will produce a mean velocity, when flowing full or half full, of at least two ft. per second, based upon the Manning formula with "n," the coefficient of roughness, valued at not less than 0.013, depending upon the type of pipe used. The minimum grades for various sizes of pipe with an "n" value of0.013 are listed below.

Pipe Size (Inches)	**Slope (Feet/100-Feet)**
8	0.40
10	0.28
12	0.22
15	0.15
18	0.12
21	0.10
24	0.08
27	0.07
30	0.06

Minimum grade of house or building connections should be 2 percent, but in no case less than 1 percent unless otherwise approved by the City.

In general , slopes greater than those shown above are desirable and are particularly recommended on the upper ends of lateral sewers.

Slopes slightly less than those shown above may be considered if substantial justification can be demonstrated. In cases where flatter slopes are considered and sewers are less than 15 inches inside diameter, there must be enough live sewer interceptions to ensure that the depth of sewage flow will be 0.3 of the pipe inside diameter, or the owner or operator of the system must demonstrate the ability to periodically flush the system in a manner approved by the Department of Environmental Quality and the City.

Engineers are cautioned not to oversize pipes in an effort to comply with allowable slope tolerances. 2 ft. per second velocities must wherever possible, be achieved with available effluent volumes.

The above minimum grades need not be adhered to for outfall sewers which carry only treated sewage.

Pipes with slopes of 20% or more, while having to conform to the maximum velocity requirements specified above, are required to have anchor walls as detailed in the Standard Detail FV202.

Slope	**Minimum Anchor Spacing O.C.**
20-34%	35-ft
35-50%	25-ft
51%+	15-ft or encasement

Because it is usually impossible to exclude all ground water infiltration it is recommended that the capacity of lateral sanitary sewers, when flowing full be equivalent to 350 gallons per capita per day, based on the total estimated future population, plus an infiltration/inflow allowance of 200 gal/day/in-dia/mi. Trunk and interceptor sewers should, in general, have capacities equal to at least 250 gallons per capita per day, plus an infiltration/inflow allowance of 200 gal/day/in-dia/mi. If appreciable quantities of industrial or commercial wastes are to be discharged into the sewers, proper allowances must be made for such additional flows. Infiltration flow measurement and evaluation is essential to the proper design of interceptors to serve regional or metropolitan service areas.

3.20 ALIGNMENT AND COVER

The Standard location within road Right-of-Way is 5 ft. North or West of road centerline.

Wastewater systems shall be located in the street right-of-way. If streets have curved alignments, the center of the manhole shall not be less than 6-feet from the curb face.

Curved alignments in wastewater systems, vertically or horizontally, are not permitted.

All sewers should be laid at depths sufficient to serve the building area of each lot, including basement drains, and to be protected against damage by frost and traffic.

All wastewater pipes shall be laid at a depth sufficient to drain building sewers to protect against damage by frost or traffic and to drain basement sewers where practical. Sufficient depth shall mean the minimum cover from the top of the pipe to finish grade at the wastewater alignment. In new residential hillside subdivisions, mainline and sewer laterals shall be placed in the street at a depth sufficient to drain building sewers on the low side of the street.

Wastewater pipes in residential areas shall be placed with the following minimum cover:

Building Service Branch	–	5-feet at right-of-way for level or upward sloping lots
Trunk and Collector Sewer	–	8-feet in roadways and easements

C-900, C-905, or ductile iron pipe shall be used in accordance with ***Subsection 3.10 (Pipe Materials and Size)*** of the Design Standards when cover is less than 3-feet from subgrade.

Where the topography is relatively flat and existing sewers are shallow (5-feet or less), the minimum cover shall be 3-feet.

Deviation from the above standards will be considered on a case-by-case basis when one of the following circumstances exist:

a. Underlying rock strata – required submittal: A request in writing to the City, together with submittal of a soils report, with a plan and profile certifying that bedrock exists 3-feet below the undisturbed ground surface at all investigated alignments.

b. A ditch or stream must be crossed – required submittal: A plan and profile; horizontal scale 1-inch = 20-feet, vertical scale 1-inch = 2-feet.

3.25 SEPARATION WITH WATERLINES

Sanitary sewers shall not be located less than 100 ft. from any well, spring, or other source of domestic water supply. All sanitary sewers or parts thereof which are located within 50 (fifty) ft. from any such source of domestic water supply shall be constructed of cast iron water pipe with watertight joints .

Sanitary sewers and domestic water lines shall not be laid in the same trench. Water mains shall be installed a minimum clear distance of 5' horizontally from wastewater pipes and shall be installed to go over the top of such pipes with a minimum of 18" of vertical clearance at the crossing of these pipes (in accordance with the requirements of OAR Chapter 333, Public Water Systems). Exceptions shall first be approved by the City. In all instances the distances shall be measured surface to surface. Parallel water and sewer lines, wherever possible, should be located at least 10 ft. apart horizontally when there is less than 18 inches of vertical clearance between water and sewer. When ·physical conditions render this spacing impossible or impractical, then ductile iron pipe with watertight joints is required for the sewer line. Wherever it is necessary for sewer and water lines to cross each other, the crossing should be at an angle of approximately 90 degrees, and the sewer shall either be located 18 inches or more below the water line or be constructed of ductile iron pipe with watertight joints for a distance of 9 ft. on both sides of the water line.

Where individual properties are served by private pumps and force mains discharging to a public wastewater system at the property line and a domestic water well is also on that same property, either Uniform Plumbing Code (for water systems servicing 3 or less dwelling units) or State Health Department (for community water systems servicing 4 or more dwelling units) specified separation of wastewater and waterlines shall apply.

3.30 RELATION TO WATERCOURSES

Generally, the top of all wastewater pipes entering, crossing, or adjacent to streams shall be at a sufficient depth below the natural bottom of the streambed to protect the line. One-foot of cover is required where the wastewater line is in rock; 3-feet of cover is required in other materials. In paved channels, the top of the wastewater line shall be placed at least 6-inches below finish grade of the bottom of the channel, except as provided above.

Wastewater lines located along or parallel to streams shall be located outside of the streambed and sufficiently removed therefrom to provide for future, possible stream channel widening. All manhole covers at or below the 100-year flood elevation shall be watertight.

Wastewater lines crossing streams or drainage channels shall be designed to cross the stream as nearly perpendicular to the stream channel as possible. The minimum cover shall be 36-inches from the bottom of the streambed or drainage channel to the top of pipe.

The pipe material shall be C-900, C-905, or ductile iron in accordance with ***Subsection 3.10 (Pipe Materials and Size)*** of the Design Standards, or continuous high-density polyethylene with an 18-foot length of pipe centered on the stream or drainage channel centerline. The specified pipe type shall extend to a theoretical point where a one-to-one slope begins at the top of the bank and slopes down from the bank away from the channel centerline and intersects the top of the pipe.

Concrete encasement will be required when the above cover requirements cannot be met. Each deviation from the above requirements will be reviewed by the City on a case-by-case basis.

3.35 MANHOLES

Manholes shall be located at all changes in pipe slope, alignment, size, type, and at all pipe junctions with present or future wastewater lines excluding 4” or 6” service branches serving 4 or fewer living units.

Manhole spacing shall not be greater than 500-feet.

The Standard Details are suitable for most conditions. New designs or revisions should not be shown on the construction drawings unless the standard designs are not suitable. New or revised designs may be necessary if:

a. One or more of the sewers to be connected to the manhole is over 27-inches in diameter (smaller diameters may require a special design if the manhole is at an alignment change)

b. Several sewers will be connected to the manhole

c. There is less than 90º between the incoming and outgoing sewer

d. The manhole will be subject to unusual structural loads

e. Diversion or other flow control measures are required

Where one or more of conditions a, b, or c are encountered, a drawing of the manhole base shall be made to determine if it is feasible to use designs shown in the Standard Details. It may be necessary for the Engineer of Record to restrict the manhole options to a specific Standard Detail specified by a note on the construction drawings. If a special design is required for any reason, it will be necessary to show that design on the construction drawings and to provide the Project Manager with structural calculations.

Some alternate manhole features are shown in the Standard Details. Where these features are required, they must be specified by a note on the construction drawings. Some examples are:

a. Slab tops must be used in lieu of cones where there will be less than 4-feet between the top of pipe and the top of the manhole lid.

b. Watertight manhole frames and covers are to be used if floodwaters are expected to

cover the manhole top or if the manhole must be located in the street gutter. Such conditions should be avoided wherever feasible.

c. Tamperproof manhole frames (7-inch depth) and covers are required in all areas outside the paved public right of way.

Standards for elevation differences at manholes have been established to compensate for normal energy losses and to prevent surcharging of the wastewater system. For purposes of slope calculation and for establishing elevation differences, the elevations are given at the theoretical horizontal intersection of the wastewater centerlines (usually the center of the manhole). The rules for elevation differences at manholes are:

a. The crowns of incoming pipes shall be at least as high as the crown of the outgoing pipe.

b. If the incoming and outgoing pipes are of equal size and are passing straight through the manhole, no added elevation change is required.

c. If the pipe alignment changes at the manhole, the invert elevation difference shall be at least 0.10-feet for 0* – 45* of horizontal deflection angle, and 0.20-feet for 45* – 90º of horizontal deflection angle. Horizontal deflection angles of greater than 90º are not allowed.

d. Drop connections are required when the vertical distance between flow-lines exceeds 2-feet.

e. All connections must enter the manhole through a channel in the base. This includes drop connections and connections to existing manholes.

Where conditions make compliance with these rules impractical, exceptions will be permitted. It will be necessary, however, for the Engineer of Record to provide a complete analysis of the need for such designs.

3.40 CLEANOUTS

Cleanouts will not be approved as substitutes for manholes on public wastewater lines. Cleanouts are permitted at the upper end of a wastewater line that is designed to be extended during a future phase of construction. If future extension requires a change in pipe slope, alignment, size, or type, a manhole will be required at the cleanout location.

Cleanouts are permitted at the end of a non-extendable sewer line that does not exceed 250-feet in length nor serve more than 8 lots.

3.45 SEWER LATERALS

3.45.01 General Guidelines

Sewer laterals are those public wastewater lines to which a private building sewer connects.

Each individual building lot shall typically be connected by a single, separate, private, building sewer/sewer lateral line connected to the public wastewater system. Individual sewer laterals shall be located no closer than 10-feet to the property line. Combined (Siamese) wastewater service branches for 2 lots will be permitted only when each property cannot legally be further divided and it is in the best interest of the City to do so.

The minimum nominal diameter of a sewer lateral shall be 4-inches. In all cases the sewer lateral shall be equal to or greater than the building sewer diameter. Sewer laterals shall be built to the same construction standards and of the same materials as the wastewater main line. Sewer laterals in general shall be placed at 90º to the wastewater main line to avoid excessive exposure to other utilities during excavation for construction or maintenance of the sewer laterals. Angles other than 90º (45º minimum) may be approved by the Project Manager for cul-de-sac lots. Sewer lateral connections may be made at manholes if such placement would not interfere with other present or future connections to the manhole.

The minimum slope of sewer laterals shall be 2%. Except that for unusual conditions, a slope of 1% may be approved. It will be necessary, however, for the Engineer of Record to provide a complete analysis of the need for any sewer lateral slope less than 2%. The maximum slope shall be 100% (45º). Connections to deep wastewater main lines shall be made with risers. Alternately, drop connections into manholes must be used where sewer lateral slopes would exceed 100%.

3.50 CONECTIONS TO EXISTING SEWERS

Connections to and extensions of existing wastewater systems will occur to facilitate new development. Certain requirements will be placed on the Engineer of Record as to permitted methods and/or locations. Wherever practicable, sewer connection s will be made directly into existing manholes. Construction of a manhole over the existing sewer may be required.

Connections to existing manholes shall be made with the following guidelines:

a. Where the invert of the connecting pipe is 2-feet or less above invert of the outgoing pipe, the sewage entering the manhole will follow a smooth concrete channel transitioning evenly from the invert of the inlet pipe into main channel. Sewage will not be allowed to fall freely to the manhole base.

b. Where the invert of the connecting pipe is more than 2-feet above the invert of the outgoing pipe, the Contractor will be required to construct an inside drop per Standard Detail FV210 for pipes 15-inches and smaller. Drops for larger pipes will not be allowed. Wastewater entering the manhole will follow a smooth concrete channel transition from the bottom of the drop into the main channel.

c. Where the invert is required to enter below the shelf of the manhole, the inlet pipe will not enter below a point where the crown of the new inlet pipe is below the crown of the outlet pipe. The base of the manhole will be rebuilt if damaged in this process. The wastewater flow shall enter the main flow in a smooth channel transitioning from the inlet pipe to the main channel.

d. No pipe will enter an existing manhole where the angle between the incoming flow and the outgoing flow is less than 90°

3.55 PRIVATE SEWER LINES

Private sewer lines shall be installed on private property in accordance with the requirements of the Uniform Plumbing Code.

Easements for private sewer lines are the responsibility of the owners; but copies of the recorded easements must be given to the Project Manager prior to any construction.

Private sewer lines shall not be permitted within the public right-of-way.

As a minimum criterion, construction of the house or building sewers shall be of the same quality and meet the same requirements as the public sewer with regard to materials, water tightness, and location. In addition, these sewers shall conform to the State and local plumbing codes and restrictions. No roof, surface, foundation, or other storm water drain lines shall be connected to the public sewers. Industrial connections shall have a sampling manhole located at their property line. All private systems connecting to public sewers that are over 250-ft in length or 8 inches in diameter or larger shall comply with all applicable requirement s of public sewers.

3.60 SUBSURFACE DISPOSAL

Subsurface wastewater disposal is permitted only when connection to a public wastewater system is not practical as determined by the City. Contact the City of Portland, as the responsible regulatory body for questions and permits for subsurface disposal within the Multnomah County area.

3.65 WASTEWATER PUMP STATION DESIGN STANDARDS

3.65.01 General

The pump station shall be a submersible pump-type facility and shall generally conform to the plans and specifications for the City of Fairview Standard Submersible Pump Station. A copy of these documents may be obtained from the City's Wastewater Division. In addition, the design shall meet or exceed the minimum requirements of the Oregon Department of Environmental Quality (DEQ) as established in the Oregon Administrative Rules, Chapter 340, Division 52, and as presented in the DEQ publication "Oregon Standards for Design and Construction of Wastewater Pump Stations". Where conflicts exist between the Fairview Public Works Standards and the aforementioned documents, or any other technical specifications identified therein, the most stringent requirements shall take precedence.

Facility: The station shall include: Submersible pumps, wet well, valve vault, associated piping and valves, electrical controls, instrumentation, telemetry, access road, fencing, landscaping, and potable water supply.

Capacity: Pump station shall be designed to pump the peak wastewater flow from the service area. When the service area is not built-out, staging of pump station capacity may be allowed.

Standby Power: At a minimum a connection for an external power source must be provided. Where the flow is substantial or where environmental damage may occur due to power failure, the Engineer may require permanent standby power.

3.65.02 Design

Calculations Required: Service area, peak flow, and pump station calculations shall be submitted to the City.

Storage Volume: Wet well shall be designed to provide 4-hours of wastewater inflow storage above high water alarm elevation.

3.65.03 Materials

Pumps: A minimum of 2 pumps shall be supplied. Each pump shall be capable of pumping the peak wastewater flow. Where more than 2 pumps are used, the station shall be able to pump peak wastewater flow when the largest pump is out of service. Pumps shall be submersible pumps manufactured by FLYGT (or equal), explosion-proof, suitable for hazardous location, capable of passing solids and shall be UL or FM listed.

Piping and Valves: Piping and valves shall be in accordance with DEQ publication "Oregon

Standards for Design and Construction of Wastewater Pump Stations".

Electrical: Electrical controls shall be located above ground mounted in a waterproof enclosure. Electrical panels shall be UL listed. The pump station wet well shall be considered a hazardous location.

Controls: Pump stations shall utilize a PLC-based control system. An ultrasonic level transducer shall control pump operation and alarms. A redundant float activated circuit shall provide a fail-safe, high-water alarm system. The Engineer shall provide the brand and model of the programmable logic controller, as well as other devices, in order to ensure compatibility with the existing system. Control system design shall be subject to the approval of the Engineer.

Alarms and Telemetry: Alarms shall be telemetered to the City of Gresham Wastewater Treatment Plant.
Telemetry shall conform to specifications and requirements provided by the Engineer to ensure compatibility with existing systems. Required alarms include:

1. Pump failure
2. Power failure
3. High water
4. Telemetry failure

Landscaping and Fencing: Refer to plans and specifications for the City of Fairview Standard Submersible Pump Station. A copy of these documents may be obtained from the City's Wastewater Division.

Additional Features: Provide 1-inch hose bib at valve vault. Potable water shall be provided by reduced pressure backflow preventer. Provide positive ventilation in valve vault. Provide odor control systems as required by the City.

Force Main: Force main shall be designed for a nominal flow velocity in the range of 3-feet to 5-feet per second.

3.65.04 Materials

Code Authority: Pump station and related facilities will be constructed in conformance with City of Fairview Electrical and Building Codes.

Fabricate Steel Surface Finish: Steel fabrications shall be 304 stainless steel or hot dipped galvanized. Corrosion resistant painting shall be required on valves, piping, and pipe fittings or other items not galvanizable.

Operating Maintenance Data: Prepare an operation and maintenance (O&M) manual including all product data and related information necessary for the City's operation and maintenance of all products and systems provided with the pump station. The O&M manual shall conform to the guidelines as set forth in the Oregon DEQ publication "Guidelines for Writing Pump Station O&M Manuals".

Spare Parts: Supply two sets each of all gaskets, bearings, and mechanical seals for rotating equipment.

Table of Contents

4.00 – WATER SYSTEM DESIGN STANDARDS 46
4.05 PIPE, VALVE, AND FITTING MATERIAL SIZE 47
4.10 GRID SYSTEM.....48
4.15 DEAD END MAINS 48
4.20 ALIGNMENT AND COVER.....48
4.25 SEPARATION WITH SEWER LINES 49
4.30 SEPARATION WITH UTILITIES.....49
4.35 RELATION TO WATERCOURSE.....50
4.40 APPURTENANCES 51
4.45 RAILROAD OR FREEWAY CROSSINGS.....52
4.50 BACKFLOW PREVENTION.....52
4.55 WATER SERVICES LINES 52
4.60 SYSTEM TESTING.....55
4.65 WATER QUALITY SAMPLING STATIONS.....55

4.00 – WATER SYSTEM DESIGN STANDARDS

Performance Standards – Water distribution systems shall be designed to meet Oregon Administrative Rules Chapter 333 (including ORS448), AWWA Standards, and guidelines of the current Water System Master Plan and its updates.

Water system design shall provide adequate flow for fire protection during projected maximum water usage and consumption. Required water system demands shall be met while maintaining the minimum operating pressures of 20psi required by the State of Oregon. For single-family residential areas (including attached single-family) the minimum static pressure shall be 35psi and the minimum fire flow shall be 1,000 GPM. For all other developments, including areas with single-family homes larger than 3,600 square feet or mixed-use areas, the required fire flow shall be as determined by Fire & Emergency Services Department up to a maximum of 3,500 GPM. For requirements above 3,500 GPM, the development shall provide supplemental fire flow as approved by Fire & Emergency Services Department.

Water system design shall meet distribution needs for projected maximum daily demand within a given service area. New water systems shall allow for future extensions beyond present development that are consistent with the master plan. New water systems shall be sized according to the current zoning area fire flow needs, velocity, standards, and water modeling determinations.

All waterlines shall be located within the public right-of-way or as directed and approved by the Engineer. These lines are placed in the public right-of-way for ease of maintenance and access, control of the facility, operation of the facility, and to permit required replacement and/or repair. The Engineer, under special conditions, may allow a public waterline to be located within a public water easement as referenced in ***Subsection 1.40*** of the Design Standards.

The water system shall be designed to provide capacities and connecting links within the development for the ultimate needs of the water service level or the City water system. The water system shall be compatible with the Comprehensive Plan, and of a design approved by the City.

The water system shall be designed to supply instantaneous domestic flows as listed in 49.210 at a minimum residual pressure of 40 psi to each service in the development and provide flows through the development to provide for similar service to the remainder of the City's water service area.

In addition to supplying the domestic water service, the water system shall be designed to supply the fire flow requirements as developed by the Insurance Services Office of Oregon (ISO) and the City of Fairview Fire Service Provider to any part of the development and through the development to the remainder of the City's service level without reducing the residual pressure below 20 psi at any connection.

In general, the water systems shall be designed to care for future service that may reasonably be expected within a period of 75 years. Compatibility with existing and future adjacent water systems must be provided. The water system shall extend to the appropriate extremities of the project to provide for future development of the water system.

A copy of the calculations and worksheets used to determine design compliance of the water system within the development and adequacy of the existing and future water system facilities shall be submitted with the water system plans for approval.

Water system valves shall be arranged so that no more than 15 houses are out of service during water main shutdowns.

Blowoffs will be required on all dead end waterlines, including those that are anticipated to be extended. Blowoffs shall be designed to create minimum flushing velocities of 4 fps.

The minimum design life for water system materials shall be 75-years.

Areas that are above the existing water service level or exceed the existing storage availability will be required to provide water service acceptable to the City prior to conceptual approval of the project. Storage facilities are preferred over pressure systems, and final determinations of water service acceptability shall be made by the City.

4.05 PIPE, VALVE, AND FITTING MATERIAL SIZE

All public water distribution systems shall be constructed with ductile iron pipe, minimum thickness Class 52. All such pipe shall be cement mortar-lined pipe with push-on or mechanical type joints. When a corrosive potential condition is encountered, all ductile iron pipe and fittings will be polyethylene encased with an 8-mil tubing meeting manufacturer and AWWA Standards. Where an active cathodic protection system is encountered as a result of other utilities, a deviation from the normal pipe design/material/installation practice may be required by the Engineer. Single services shall be 3/4 inch and single dual service lines 1 inch. All services lines shall be copper.

All gate valves shall be pressure rated for 200psi and all butterfly valves shall be pressure rated for 150psi. All ductile iron mechanical joint fittings shall be pressure rated at 350psi. All flanged fittings and cast iron mechanical joint fittings shall be pressure rated at 250psi. All fittings shall be factory cement mortar lined and coated. Pipe constructed per ***Subsection 5.02.06*** will require the use of restrained pipe joints or ball and socket river pipe.

Water distribution main sizes shall generally conform to the following:

4-inch – May only be used with approval of the Engineer in residential zones on dead-end streets less than a centerline distance of 250-feet measured from the center of the intersection street to the radius point of the cul-de-sac and that serves 12 or fewer single-family residences. All 4-inch mains shall be connected to a looped minimum 6-inch main. Fire hydrants are not permitted on 4-inch lines. All 4-inch lines shall terminate with a standard blow-off (Standard Detail FV453).

6-inch – Minimum size residential subdivision distribution water main for the grid (looped) system. A 6-inch line shall not exceed an unsupported length of 600-feet and shall not be permanently dead-ended. Looping of the distribution grid shall be at least every 600-feet.

8-inch – Minimum size for permanently dead-ended mains supplying fire hydrants with a fire flow of 1,000 GPM and for primary feeder mains in residential subdivisions. Not to exceed an unsupported length of 600-feet unless otherwise approved by the Engineer.

10-inch and larger – As required for primary transmission lines in subdivisions, industrial areas, and commercial areas.

Where system static pressures allow and field flow measurement or system modeling shows adequacy, velocities in distribution mains may be designed but shall not exceed 8-feet per second for combined fire, domestic, and irrigation flows. Velocity in service lines (as defined in ***Section***

4.55 of the Design Standards) shall be designed not to exceed 10-feet per second.

For portions of the water system with mid-range to low-static pressures, required flows may not be achievable while still maintaining a minimum system residual of 20psi. Oversizing of waterlines may be required to achieve the required flows.

4.10 GRID SYSTEM

The distribution system mains shall be looped at all possible locations. All developments will be required to extend mains across existing or proposed streets for future extensions of other developments. All terminations shall be planned and located such that new or existing pavement will not have to be cut in the future when the main is extended.

4.15 DEAD END MAINS

Dead-end mains that are permanent or that will be extended in the future shall be provided with a properly sized blow-off. See Standard Details FV453.

The installation of permanent or long-term, dead-end mains greater than 250-feet, upon which fire protection depends, and single mains serving relatively large areas will not be permitted unless otherwise approved by the Engineer.

No more than 20 single-family residences shall be temporarily served from an un-looped waterline during a phased construction, unless approved by the Engineer.

4.20 ALIGNMENT AND COVER

4.20.01 Right-of Way Location

Pipelines that are intended to be straight and shall not deviate from the straight line at any joint in excess of 1-inch. Provide a uniform positive grade on all pipe laying.

Water mains shall be located on the South and East sides of the centerline 4 ft. off the curb in the pavement.

Valve operating nuts shall be located toward the nearest intersecting property line.

See section 3.25 of the Design Standards for the location and requirements of a waterline located near a sewer line.

Where waterlines are located within narrow rights-of-way (less than 50-feet), location of waterline shall be reviewed and approved by the Engineer on a case-by-case basis.

Except as provided in ***Subsection 1.40*** of the Design Standards, all waterlines shall be in the public right-of-way. All abrupt changes in vertical or horizontal alignment shall be made with a fitting and adequate thrust restraint. Refer to Standard Details FV450A and FV450B.

Curved alignment for waterlines or mains is permitted and shall follow the street centerline when practical. The minimum allowed radius shall be based on allowable pipe deflection for the pipe diameter and the pipe laying length, but not to exceed 3° joint deflections.

4.20.02 Minimum Cover

Pipe cover is 36-inches in an improved Right-of-Way and 42-inches in an unimproved Right-of-Way.

The minimum cover for mains in unpaved areas shall be 48-inches from finish grade.

Finish grade shall normally mean the existing or proposed pavement elevation. Where the main is located in the cut or fill side slope or where mains are located in easements, finish grade shall mean final ground elevation at the water main alignment.

Deviation from the above standards will be considered on a case-by-case basis when the following exists:

a. When there is underlying rock strata that prohibits placement of the water main 36-inches below finish grade, a written request must be submitted to the Engineer, together with submission of a soils report with a plan and profile certifying that bedrock exists less than 3-feet below the undisturbed ground surface.

b. Substantial utilities exist at an elevation conflicting with the waterline at 36-inches below finished grade; and installation of the waterline below such utility would cause the new waterline to be at an unreasonably deep elevation below finished grade.

c. Where the water main or service is installed at a depth of 24-inches or less below finished grade, controlled density fill (CDF) shall be used in place of standard backfill material.

4.25 SEPARATION WITH SEWER LINES

Water mains and services shall be installed a minimum clear distance of 5-feet horizontally from gravity sanitary sewer mains and laterals, and shall be installed to go over the top of such sewers with a minimum of 18-inches of clearance at intersections of these pipes. Separation from sanitary sewer force mains shall be reviewed on a case-by-case basis. Exceptions shall first be approved by the Engineer. In all instances, the distances shall be measured edge to edge.

4.30 SEPARATION WITH UTILITIES

The minimum spacing between water mains and storm drains, gas lines, and other underground utilities, excepting sanitary sewers, shall be 3-feet horizontally when the standard utility location cannot be maintained. This separation also applies to water service and utility service lines.

Where water mains are being designed for installation parallel with other water mains, utility pipe, or conduit lines, the vertical separation shall be 12-inches below or in such a manner that will permit future side connections of mains, hydrants, or services, and avoid conflicts with parallel utilities without abrupt changes in vertical grade of the above mentioned main, hydrant, or service. Where crossing of utilities are required, the minimum vertical clearance shall be 6-inches.

4.35 RELATION TO WATERCOURSE

New water mains may cross over or under existing streams, ponds, rivers, or other bodies of water.

Mains crossing stream or drainage channels shall be designed to cross as nearly perpendicular to the channel as possible.

Valves shall be provided at both ends of the water crossing so that the section can be isolated for testing or repair. The valves shall be easily accessible and not subject to flooding.

a. **Above Water Crossings** – The pipe shall be designed by the Engineer of Record to provide support, anchorage, and protection from freezing and damage, yet shall remain accessible for repair and maintenance. All above water crossings will require review and approval by the Engineer.

b. **Underwater Crossings**

(1) The following surface water crossings will be treated on a case-by-case basis:

(a) Stream or drainage channel crossing for pipes 12-inches inside diameter and greater

(b) River or creek crossings requiring special approval from the Division of State Lands

(2) The minimum cover from the bottom of the streambed or drainage channel to the top of pipe shall be 36-inches, except as noted below.

(3) A scour pad centered on the waterline will be required for mains less than 12-inches inside diameter when the cover from the top of the pipe to the bottom of the streambed or drainage channel is 36-inches or less. The scour pad shall be concrete, 6-inches thick and 6-feet wide; reinforced with #4 bars 12-inches on center both ways; and shall extend to a point where a one-to-one slope begins at the top of the bank and slopes down from the bank away from channel centerline and intersects the top of the pipe. There shall be a minimum 6-inches clearance between bottom of pad and top of waterline.

4.40 APPURTENANCES

4.40.01 Valves

In general, valves shall be the same size as the pipes in which they are installed. Valve types and materials shall conform to the City of Fairview Construction Standard Specifications.

Distribution system valves shall be located at and flanged to the tee or cross fitting. There shall be a sufficient number of valves located so that not more than 4, and preferably 3 valves, must be operated to affect any one particular shutdown. The spacing of valves shall be such that the length of any one shutdown in commercial or industrial areas shall not exceed 500-feet or 800-feet in other areas.

In general, a tee-intersection shall be valved in 2 branches and a cross-intersection shall be valved in 3 branches. Transmission water mains shall have valves at not more than 1,000-foot spacing. Hazardous crossings such as creeks, railroad, and freeway crossings shall be valved on each side. Valves shall be accessible at all times.

When a hydrant tee or a tee branching to a cul-de-sac blow-off is installed in a sloped waterline, install a main line valve on the uphill run of the tee to allow for release of air from hydrant or blow-off. An additional main line valve may be needed on the downhill run of the tee for other operational purposes.

Distribution tees and crosses with valves for future branch lines on transmission mains may be required at the direction of the Engineer.

4.40.02 Fire Hydrants

The public water system supplying public fire hydrants shall be designed to provide up to a maximum of 3,500 GPM. Minimum fire flow in single-family residential areas shall be 1,000 GPM, except in areas where homes exceed 3,600 square feet or areas of mixed use, in which case fire flows will be as determined by Fire & Emergency Services Department.

The distribution of hydrants shall be based upon the required average fire flow for the area served. Design coverage shall result in hydrant spacing of approximately 400-feet in residential areas and approximately 300-feet in commercial or industrial subdivisions. Additional hydrants shall be placed as required by Fire & Emergency Services Department and the Engineer.

Residential hydrants shall be located as nearly as possible to the corner of street intersections and not more than 600-feet from any cul-de-sac radius point.

No fire hydrant shall be installed on a main of less than 8-inches inside diameter unless it is in a looped system of 6-inch mains. The hydrant lead shall be a minimum of 6-inches nominal diameter.

All fire hydrants will be located at the back of the existing or proposed sidewalk, in the planter strip, or behind the sidewalk if adequate right-of-way exists. If any public hydrant encroaches on private property, an easement must be provided to the City. In general, fire hydrants will be located at or near the point of curvature of the curb return or at a common property line. Pumper port of fire hydrant shall be perpendicular to the curb line or shoulder as applicable.

No hydrant shall be installed within 5-feet of any existing above-ground utility, nor shall any utility install facilities closer than 5-feet to an existing hydrant.

Hydrant installation shall conform to Standard Detail FV451. Maximum 6-foot bury hydrants will be required in all installations. Installation of hydrant extensions will not be allowed, unless approved by the Engineer.

Storz Adapter shall be 5”x4.5” Harrington HPHA-50-45NH/CAP or approved equal.

Unless off of a fire line/fire sprinkler service, fire hydrants shall be placed on the same side of the right-of-way as the waterline serving the fire hydrant. Other proposed locations must be approved by the Engineer.

Each fire hydrant shall have an auxiliary valve and valve box that will permit repair of the hydrant without shutting down the main supplying the hydrant. Such auxiliary valves shall be resilient-wedge gate valves. The auxiliary valve shall have mechanical joint-by-flange joint ends as referenced in the Standard Detail FV451. The valve shall be connected directly to the water main using a flange joint tee and “Megalug” retainer glands, or approved equal.

Hydrants shall not be located within 20-feet of any building, nor shall they be blocked by parking.

Guard posts, a minimum of 3-feet high, shall be required for protection from vehicles when necessary. Such protection shall consist of 4-inch diameter steel pipes 6-feet long, filled with concrete, buried a minimum of 3-feet deep in concrete and located at the corners of a 6-foot square with the hydrant located in the center. Use of posts other than at the 4 corners may be approved by the Engineer.

4.40.03 Pressure-Reducing and Combination Air Valve Units

The City's water distribution system is divided into several pressure zones. Where water systems cross these zone lines, a pressure-reducing valve station may be required. The specific design and location for such valves will be reviewed and approved by the Engineer.

When shown on the plans or designated by the Engineer, combination air valve units, per Standard Detail FV455, shall be installed. Such valves will be required on large diameter transmission lines at all high points in grade and at other points as determined by the Engineer.

4.45 RAILROAD OR FREEWAY CROSSINGS

All such crossings defined above, or as determined by the City, to be of a hazardous nature shall be valved on both sides of the crossing. Casing of railroad or freeway crossings, if required, shall be as noted in the permit from the respective agency.

4.50 BACKFLOW PREVENTION

Backflow prevention assemblies shall be required on all 2-inch and larger water services, irrigation services, and fire sprinkler system services. Backflow assemblies shall be located on the lot it serves at the right-of-way line. For installation requirements on assemblies 3-inches through 10-inches, see Standard Detail FV 462. All assemblies shall be State of Oregon approved and testable.

4.55 WATER SERVICES LINES

The sizes of water service lines that may be used are 1-inch, 2-inch, 4-inch, 6-inch, 8-inch, 10-inch, and 12-inch. Water service lines will be reviewed for impacts on the distribution system and shall not be greater in size than the distribution main. In no case shall a new service be provided off of an existing galvanized waterline.

Pipeline velocities: domestic flows, 2 to 5 fps; fire flows, up to 8-fps. Minimum normal residual pressure 40 psi.

Minimum residual pressure at a fire flow 20 psi.
Maximum residual or static pressure 100 psi.

Residual pipeline friction losses shall be based on a Hazen and William s C constant equal to 100.

Domestic service lines 1-inch and 2-inch shall normally extend from the main to behind the curb, with a meter curb stop and meter box located at the termination of the service connection (Standard Details FV456). Meter shall be provided and installed by City. Meter boxes are to be provided by the owner. Whenever possible, individual service connections shall terminate in front of the property to be served along the street frontage where property is addressed, and shall be located 36-inches each side of a common side property line. Water service via an easement across a separate parcel under separate ownership, or capable of being sold off, is not allowed unless otherwise approved by the Engineer.

For services 4-inch and larger (3-inch and larger meters), a design drawing must be submitted to the City showing the vault and fitting requirements with the expected flow (normal and maximum daily flow) requirements and proposed usage, and meter vaults shall be placed at the entrance to the property being served, unless otherwise approved by the Engineer. See Standard Details FV459, and FV460.

Multiple service connections to a premise shall be laid out to follow a logical sequence of addresses to facilitate matching of service connection to building(s). Onsite waterlines shall be laid out to facilitate a logical matching of service connection to building and address. Each meter must have its own service line and connection to a water main. No manifolding will be allowed unless approved by the Engineer.

When a corrosive potential condition is encountered and the copper service passes over or under an active cathodic protection system, the service will be installed in a Schedule 40 PVC conduit for a distance of 10-feet on each side of the active system. All conduit placements shall be included in the as-built drawings.

GENERAL DESIGN CRITERIA

WATER SERVICE AND METER SIZING

SERVICE SIZE (INCHES)	METER SIZE (INCHES)	MAXIMUM DESIGN FLOW (GPM)
1	¾	30
1	1	50
2	1½	100
2	2	160
4	3	320
4	4	500
6	6	1,000
8	8	1,600

Notes:	1.	Continuous flow not to exceed 30% of maximum design flow for ¾-inch to 2-inch disk meters
	2.	Continuous flow not to exceed 50% of maximum design flow for all compound meters

	3.	Meters larger than 8-inches will be reviewed on a case-by-case basis

Fire Service – There are 3 categories of private fire services: (1) hydrants, (2) fire sprinkler lines, and (3) combination hydrant and fire sprinkler lines.

The water fire service line shall normally extend from the main to the property line and end with a vault, metering device, and valves. An approved backflow prevention assembly will be required of the property being served.

Fire lines serving only fire sprinkler systems shall be metered by a detector meter on the approved backflow assembly.

Whenever possible, the fire service shall be located along the street frontage where the parcel is street addressed.

Fire sprinkler systems for single-family residences or rowhouse-type residences shall be served through a standard metered service. The fire sprinkler system may be served through the domestic service for the same residence. The combined domestic, irrigation, and fire sprinkler flow demands may not exceed the City of Gresham allowable flow for that particular size of service and meter.

Fire Flows – Fire flows given are typical fire flows. Exact fire flows shall be determined in accordance with ISO and City of Fairview Fire Service Provider Standards.

	Typical Fire Flow		
Description	**Quantity (gpm)**	**Duration (hours)**	**Volume (mg)**
Residential	1,500	2	0.18
Triplex Construction*	2,000	2	0.24
Multifamily Dwelling Area*	2,500	3	0.45

*Ordinary construction.

Fire flows must be available at 20 psi residual pressure.

The Insurance Services Office of Oregon fire flow durations are:

- 1 hour for each 1,000-gpm required
- 2 hour minimum duration
- 10 hour maximum duration
- 12.000-gpm maximum fire flow

Fire Vaults – A vault for a 12-inch and larger double check detector assembly will be required when a development provides fire sprinklers. The vault drawing will be included on construction drawings submitted to the City.

GENERAL DESIGN CRITERIA
FIRELINE/FIRE SPRINKLER SYSTEM SERVICES

SERVICE SIZE (INCHES)	METER SIZE (INCHES)	MAXIMUM DESIGN FLOW (GPM)
1	¾	30
1	1	50
2	1½	100
2	2	160
4	City installed flow meter	500
6	City installed flow meter	1,000
8	City installed flow meter	1,600
10	City installed flow meter	2,500

Notes:	1.	Continuous flow not to exceed 30% of maximum design flow for ¾-inch to 2-inch disk meters
	2.	Continuous flow not to exceed 50% of maximum design flow for all compound meters
	3.	Meters larger than 8-inches will be reviewed on a case-by-case basis

4.60 SYSTEM TESTING

All new water systems (lines, valves, hydrants, and services) shall be individually pressure tested, chlorinated, and tested for bacteria. All testing shall be performed in accordance with the Fairview Public Works Standards and in the presence of a City Inspector.

No connection to the existing system shall be made until the new system has been tested and accepted.

4.65 WATER QUALITY SAMPLING STATIONS

Water sampling stations will be required and installed in all new subdivisions, or as directed by the Engineer. In general, install one station for every 20 lots. See Standard Detail 463.

Table of Contents

5.00 – STREET DESIGN STANDARDS 57
5.05 GENERAL REQUIREMENTS 57
5.10 STREETS 60
5.15 ALLYES AND PRIVATE RESIDENTIAL STREETS/ACCESSWAYS 68
5.20 DRIVEWAYS 68
5.25 SIDEWALKS 69
5.30 BICYCLE FACILITIES 71

5.00 – STREET DESIGN STANDARDS

5.05 GENERAL REQUIREMENTS

5.05.01 Performance Standards

All street designs shall provide for the safe and efficient travel of motorist, bicyclists, and pedestrians. Streets shall be designed to carry the recommended traffic volumes identified for each street classification. Street classifications are set forth in the Volume I of the Fairview Transportation System Plan (TSP).

Streets shall be designed to meet or exceed minimum guidelines. These guidelines are set forth in the "AASHTO Policy on Geometric Design of Highways and Streets" (latest edition). Traffic Control Devices shall conform to the "Manual on Uniform Traffic Control Devices for Streets and Highways" – Federal Highway Administration with Oregon Supplements – Oregon Department of Transportation (latest edition).

All vertical and horizontal curves shall meet the guidelines of the AASHTO policy and the design speed for each street classification. Where practical, the Engineer of Record shall provide the decision sight distance for the design speed based on the methodology in AASHTO Chapter IX, or the stopping sight distance based on the 85% speed as set forth in the AASHTO policy, whichever is greater. Only with the approval of the City shall a lesser sight distance be permitted.

5.05.02 Access

All development shall be provided with public street access. Access streets (public and/or private), driveways, and easements shall be as set forth in other sections of these Design Standards.

5.05.03 Permanent Dead-end Streets

A standard cul-de-sac turnaround shall be provided at the end of a permanent dead-end street that does not provide looped circulation. Permanent dead-end streets shall be limited to service no more than 25 dwellings and shall not exceed 200-feet in length. A permanent dead-end street is measured from the right-of-way line at the furthest end of the dead-end street.

5.05.04 Transportation Analysis

The City will require a traffic analysis report as determined by the type of development and its potential impact to existing street systems. A traffic analysis will generally be required for a development when (1) it will generate 1,000 vehicle trips or more per weekday; or (2) when a development's location, proposed site plan, or traffic characteristics could affect traffic safety, access management, street capacity, or known traffic problems or deficiencies in a development's study area; or (3) when a proposed change in zoning designation could result in higher trip generation than current zoning. The report will be prepared by a traffic engineer licensed in the State of Oregon. At a minimum the report shall contain the following:

1. **Purpose of Report and Study Objectives**
   A discussion of key traffic issues to be addressed and the transportation system and development objectives related to a specific development. General transportation system objectives are to:
   a. maintain easy and safe traffic flow on surrounding street system;
   b. provide effective and safe transfer of vehicle traffic between the site and the street system;
   c. provide convenient, safe, and efficient onsite and offsite movement of vehicles, pedestrians, transit, service and delivery vehicles, and bicycles;
   d. effectively mitigate adverse site-generated traffic impacts on affected streets and intersections – site-specific objectives may be established by the City for each

study; and

e. analyze accident history in study area and evaluate impacts of site-generated traffic.

2. **Executive Summary**
   A concise summary of the study purpose/objectives, site location and study area, development description, key assumptions, findings, conclusions, and recommendations.
3. **Description of Site and Study Area Streets**
   A description of the site and study area, existing traffic conditions and accident history in the study area, and anticipated nearby development and committed street improvements that would affect future traffic in the study area.
   The study area will be defined by: All streets, ramps, and intersections through which peak hour site traffic composes at least 5% of the existing capacity of an intersection approach, or street sections or intersections impacted by site traffic on which existing volume to capacity (V/C) ratio exceeds 0.90 or level of service "D", or accident character or residential traffic character is expected to be significantly impacted.
4. **Onsite Traffic Evaluation**
   An evaluation of the proposed (and alternative) site access locations; the adequacy of access drive depth, driveway lanes, and queuing storage; and the safety and efficiency of proposed vehicular circulation, parking layout, and pedestrian and service vehicle routes/facilities, together with recommendations for onsite traffic markings and controls.
5. **Offsite Traffic Analysis**
   The analysis shall include:
   a. Existing daily, p.m. peak hour, and site peak hour counts by traffic movements at intersections affected by generated traffic from the development (use traffic flow diagrams).
   b. Background daily, p.m. peak hour, and site peak hour volumes for these same intersections and proposed access points. Background traffic includes existing volumes plus traffic projected from in process development.
   c. Total daily, p.m. peak hour, and site peak hour volumes for these same intersections and proposed access points when the development is in full service (use traffic flow diagrams). In the case of zoning changes, the traffic study shall assume land uses that result in greatest trip generation. The study shall also include a 20-year forecast.
   d. A determination of the existing levels of service, background levels of service, and total traffic levels of service at each intersection and access points studied. For signalized intersections, levels of service shall be reported using existing timing plans and lane configurations.
   e. A discussion of the need for traffic signals. This should include a traffic warrant computation based on the National Manual on Uniform Traffic Control Devices (latest edition).
   f. The recommendations made in the report should be specific and should be based on a minimum level of service "D" with maximum V/C ratio of 0.90 when the development is in full service. Individual movement level of service must meet level of service "E" and a V/C ratio of 1.0. As an example, if a traffic signal is recommended, the recommendation should include the type of traffic signal control and what movements should be signalized. If a storage lane for right turns or left turns is needed, the recommendation should include the amount of storage needed. If several intersections are involved for signalization and an interconnect system is considered, specific analysis should be made concerning progression of traffic between intersections. For stop-controlled intersections, a minimum level of service "E" shall be required on the minor approach. Level of service shall be

based on the current edition of the TRB Highway Capacity Manual and the associated Highway Capacity Software. The City may approve other methods.

g. The report should include a discussion of bike and pedestrian usage and the availability of mass transit to serve the development.

6. **Recommendations for Public Improvements**

Recommendations should be made for external roadway improvements, such as additional through lanes and turn lanes, and traffic control devices necessitated as a result of the development. Recommended improvements to transit facilities and pedestrian and bike circulation should also be reported.

The recommendations should specify the time period within which improvements should be made, particularly if improvements are associated with a phased development, the estimated cost of improvements, and any monitoring of operating conditions and improvements that may be needed. If needed street improvements unrelated to the development are identified during the analysis, such improvements should be reported. Traffic signals proposed within ¼-mile of nearest signal shall incorporate a Synchro/Simtraffic analysis to verify compatibility of operation. Where time-of-day plans are in operation, proposed signals shall be analyzed with those time-of-day plans and recommendations made accordingly.

7. **Access Management**

On sites with arterial and collector street frontages, the report shall evaluate and recommend the use of access management plans or techniques to:

a. separate basic conflict areas (reduce number of driveways or increase spacing between driveways and intersections); and
b. remove turning vehicles or queues from the through lanes (reduce both the frequency and severity of conflicts by providing separate paths and storage area for turning vehicles and queues).

These techniques may include turn restrictions, striping, medians, frontage streets, channelization of lanes or driveways, shared driveways and access between similar uses, access consolidation, lanes for left or right turns, and other transportation system management (TSM) actions.

8. **Safe Route to Schools**

Traffic studies associated with schools shall include a “Safe Route to School Study”. The purpose of the study is to designate routes that are safe for children to walk to and from school. The route should guide students over the safest and best path to and from school. The route should cross the fewest major streets possible and have the most protection available from existing traffic controls. If necessary, school boundaries should be revised to eliminate extremely hazardous conditions, otherwise bus transportation should be considered. At times, children may be required to take a longer route to avoid hazardous locations, or to use existing safety features or controls.

9. **Technical Appendix**

A technical appendix including worksheets, charts, and drawings to support findings described in the body of the report. Include computer diskette with all HCS Synchro/Simtraffic input and output files matching those provided in the traffic analysis report. The files shall be clearly identified on the disc for easy reference.

5.10 STREETS

5.10.01 Street Classification

All streets within the City shall be classified as listed in Volume I of the TSP except as noted herein. The classification for any street not listed shall be that determined by the Manager.

5.10.02 Right-of-Way and Pavement Width

Right-of-way dedication at intersections shall be along the "long cord".
Right-of-way and pavement widths for each street classification shall be as follows:

Roadway Type	Paved Width (curb-to-curb)	Right-of-Way
Neighborhood Collector w/Bike Lane	34-feet	55 to 56-feet
Neighborhood Collector w/Parking	34-feet	55 to 56-feet
Local Residential	28-feet	49 to 50-feet
Local Commercial	38-feet	60-feet
Local Industrial	40-feet	60-feet
Alley	16-feet (buffer on both sides) 20-feet (buffer on one side)	24-feet
Cul-de-sac	24-feet	47-feet

The city may reduce sidewalk buffer width (on both sides of the street) from 1-foot to 0.5-foot in residential areas.

5.10.03 Half-Street and Frontage Improvements Construction

Where half-street is justified, the right-of-way and pavement width will be approved by the City. The pavement width shall be at least ½ of the standard street classification width, but in no case shall the pavement width be less than that required to provide 2 lanes of traffic to pass at a safe distance. For a 32-foot local street, the half-street pavement width will be 20-feet. Half-streets will only be approved when the abutting or opposite frontage property is undeveloped and the full improvement will be provided with development of the abutting or opposite (upon right-of-way dedication) frontage property. Half-streets shall be signed "No Parking" on the improved (curb) side of the street and, if necessary, the unimproved side of the street to provide a clear-traveled way of 20-feet.

A development on an unimproved substandard street shall be responsible for constructing a continuous 20-foot half street to a connection with the nearest standard (publicly-maintained) street.

Frontage improvements will be required in cases where a paved street that is substandard exists along the frontage to be developed. If a pavement design, including an analysis of the existing pavement section, indicates that the existing pavement is adequate to provide a minimum of 20-years design life, then that pavement may remain and only the additional improvements, such as curb and pavement widening, are required. If the analysis indicates that the existing pavement is inadequate, half-street construction as described above will be required.

5.10.04 Pavement Design

In general, all streets shall be constructed with asphaltic concrete (AC); however, other materials such as Portland cement concrete (PCC), concrete paver stones, etc., are permitted as approved by the City. When required by the City, all public street improvements shall include a specific

pavement design based on existing soil conditions and the recommended traffic volumes for the street classification.

1. Street Pavements – The street pavement sections shown in the Standard Detail are typical and are comprised of PCC or AC with crushed rock base on compacted subgrade soil. Treated subgrades in the pavement section are also acceptable as approved by the City.
2. Soil Tests – Conduct 2 soil tests for projects that have 500-feet or less of new street. An additional soil test may be required for each additional 500-foot section. For asphalt pavements, conduct soil testing to determine the design subgrade resilient modulus (Mr) within the top 2-feet of the proposed subgrade elevation.
3. Design Life – 20-years.
4. Design Procedure/Asphalt Pavements – The design procedures contained in the following references are preferred (see the References section for full citations). AASHTO Guide for Design of Pavement Structures, current edition – American Association of State Highway and Transportation Officials. Thickness Design – Asphalt Pavements for Highways and Streets, current edition – The Asphalt Institute.
5. Design Procedure/Concrete Pavements – The design procedures contained in the following references are preferred (see the References section for full citations). AASHTO Guide for Design of Pavement Structures, current edition. Thickness Design for Concrete Highway and Street Pavements, current edition – Portland Cement Association.
6. Minimum Thickness – The thickness designs specified in the Standard Details are minimums. Actual pavement thickness may be based on specific pavement designs as approved by the City.
7. Local Street Asphalt Pavement – Specify ½-inch Level 2 surface course with a minimum thickness of 2-inches. Specify the base course of asphalt concrete as ½-inch Level 2 with a minimum thickness of 2-inches.
8. Collector Asphalt Pavement – Specify ½-inch Level 2 wearing surface with a minimum thickness of 2-inches. Specify the base course of asphalt concrete as ½-inch or ¾-inch Level 2 with the thickness as identified on the Standard Details.
9. Treated Base Materials – For asphalt pavement sections that include either a cement treated base (CTB) or an asphalt treated base (ATB), specify a finish surface pavement of not less than 3-inches of asphalt concrete.
10. Pavement design shall take into account the topography and include subsurface drains and/or geotextiles as required.

The acceptable structural section shall be that shown on the Standard Drawings unless otherwise directed. The City may increase the structural design to conform to projected traffic loads, or unstable soil conditions.

The Design Engineer will provide a street structural design section for all roadways classified Neighborhood Collector and higher, as well as local streets in industrial zones.

Sections utilizing methods of construction other than those shown in the Standard drawings (i.e., concrete pavement, lime or cement treated subgrade , or Portland cement or asphaltic cement treated base, etc.) may be submitted to the City for approval.

In areas determined unstable by the City, the design engineer will be required to submit a structural design for approval. Included in the submittal shall be the soils analysis on which the design was based.

5.10.05 Design Speed

Design speeds for classified streets shall be as follows:

Roadway Type	Design Speed (MPH)
Collector	25-35
Local	25
Alley	15
Cul-de-sac	15

Use posted speed where posted speed is within range indicated. Where posted speed is outside range given above, use the closest design speed for that classification.

5.10.06 Horizontal Curves

Horizontal curve radius (on centerline) for each street classification shall be designed according to the roadway design speed. The radius shall not be less than the following:

Design Speed (MPH)	Radius (Feet)
15	100
25	180
30	300
35	450
40	670
45	900

"Loop" roads and other traffic-calmed local roads that are designed to "self-enforce", lower speeds may use centerline radius as low as 50-feet with the Manager's approval. Such roads shall be limited to low density, residential developments with a maximum number of 50 dwelling units and 500 ADT. Maximum distance between speed control points shall be 500-feet. Speed control points include horizontal curves of 50-feet to 100-feet, traffic circles, textured pavement sections, or other similar traffic calming devices. Use of speed bumps is discouraged.

The normal construction centerline shall be identical with the Right-of- Way centerline. In special cases, offset construction centerlines may be approved by the City.

Curb line radii shall be concentric with the Right-of-Way line, except in "cul- de-sacs" and "eyebrows" with a 50-ft Right-of-Way line radius, the minimum curb radius will be 40-ft, unless otherwise approved by the City.

Curb line radius at street intersections shall be 20-ft unless otherwise designated by the City.

Dead end streets that in the future will be extended that are over 150-ft long but less than 300-ft long, shall have a cul-de-sac with a minimum radius of 51.5-ft or per the most recent City of Fairview, Fire Service Provider Standards.

5.10.07 Vertical Curves

Vertical curve length shall be based on the design criteria that include: (1) design speed, (2) crest vertical curve, and (3) sag vertical curve. Stopping sight distance for crest and sag vertical curves shall be based on sight distance and headlight sight distance, respectively.

All vertical curves shall be parabolic and the length shall be computed for each location per AASHTO design criteria.

Grade changes in excess of 1 percent will require a vertical curve.

Minor streets with grades in excess of five percent intersecting an arterial street shall be designed to provide a flat stopping area outside of the traveling lanes of the arterial. Stopping area grades will not exceed five percent.

5.10.08 Grades

Maximum grades for each street classification shall be as follows:

Roadway Type	Grade (ft/ft)	Grade (%)
Collector	0.080	8
Local	0.120	12
Alley	0.120	12
Cul-de-sac	0.120	12

Local streets may exceed 12%, but in no case permitted to exceed 15%. The City may approve a grade greater than 12% when all of the following conditions exist:

1. Topographic constraints do not allow the development to be served by a street with a maximum grade of 12% without causing destabilization of soils by excessive cuts and fills.
2. There is no access to the property being developed through adjacent properties at a maximum 12% grade.
3. The section of local street being designed will not exceed a combination of length, horizontal alignment, or grades exceeding 12% that will create hazardous traffic conditions.

For unsignalized intersections, keep the longitudinal grade on stop-controlled approaches below 8% for an approach distance of 50-feet.

Minimum grade for all streets shall be 0.0050 foot per foot (0.50%). In all cases street grades shall allow for proper and adequate drainage. Cul-de-sac “bulbs” shall have a minimum slope of 0.0060-feet per foot (0.60%).

5.10.09 Concrete Curb

All street improvements will be constructed with monolithic curb and gutter. Standard curb as shown in the Standard Details may only be used when the longitudinal street grade is 0.01 foot per foot (1.0%) or greater; or where cross slope of roadway drains away from curb such as with raised median construction.

Curb comers shall be designed so that the grade shall flow smoothly from one street to the other with proper attention directed to drainage.

5.10.10 Intersections

Connecting street intersections shall be located to provide for traffic flow, safety, and turning movements as conditions warrant. Where signalized, design shall provide for optimal signal phasing. Consideration for arterial street progression, protected/permitted and permitted left turn phasing, shall occur. New signal proposals in remote locations shall first include an evaluation of alternate applications such as roundabouts.

Arterial and Collector Intersections: Exclusive left turn lanes will be provided; crosswalks will be provided at all approaches; street alignments across intersections shall be continuous.

Community and Local Street Intersections: Street and intersection alignments should facilitate

local circulation but avoid alignments that encourage non-local through traffic.

Streets shall be aligned so as to intersect at right angles (90°). Angles of less than 70° will not be permitted. Intersection of more than 2 streets at one point will not be permitted.

New streets shall intersect with existing street intersections so that centerlines are not offset, except as provided below. Where existing streets adjacent to a proposed development do not align properly, conditions may be required of the development to provide for proper alignment.

For intersections that are not directly aligned with street centerlines, the centerline spacing must meet the following minimum separation distance:

Roadway Type	Intersection Spacing (Ft)
Collector	300
Local	100

The City may permit a minimum spacing of not less than 200-feet for a Collector when findings are made to establish that:

1. Without the change there could be no public street access from the parcel(s) to the existing street, or
2. The change is necessary to support local pedestrian/bicycle circulation and access; and the change is necessary due to topographic constraints; and all other provisions of the street design requirements can be met.

5.10.11 Curb Return Radius

Curb return radius at street intersections shall be designed to accommodate all expected traffic. Curb extensions and/or special crosswalk/sidewalk features designed to enhance pedestrian safety may be required to encourage pedestrian usage.

The minimum allowed curb return radii between intersecting streets are shown below. The minimum radii are based on the lowest classification of the 2 intersecting streets. For example, if a minor arterial intersects a neighborhood collector, the minimum turning radius for the 4 intersection corners should be 25-feet as displayed on the neighborhood collector row. If the intersection corner has on-street parking or bicycle lanes, the minimum radii can be reduced by 5-feet.

Lowest Classification Of Intersecting Streets	Minimum Curb Return Radius (Ft) Edge of Pavement/Curb
Collector	25
Local	20

If bicycle lane or on-street parking exists, above turning radii may be reduced by 5-feet, and in Special Plan Districts such as Downtown, Gresham Civic Neighborhood, and Rockwood.

Streets with heavy truck movements may be required to install larger curb radii than shown in the table. The City will provide direction in deciding if an area needs larger than minimum turning radii at specific intersections. When designing turning radii higher than the minimums, the City will identify the design vehicle to be applied. Streets with daily transit routes shall not have curb

return radii less than 25-feet to accommodate safe bus turning movements.

5.10.12 Parking

Roadway Type	Parking Lanes
Collector	2
Local Commercial	2
Local Industrial	2

No parking on Collector Streets within 45-feet of curb return. No parking on Local Streets within 30-feet of curb return. For streets designated collector and below, the Manager may consider design modifications to conserve major trees in the public right-of-way. Subject to approval by the Manager, parking lanes may be removed on one or on both sides of a street.

5.10.13 Local Street Design for Adverse Topography

Local streets shall have a cross-section slope of 2.0% ("crown") in accordance with Standard Detail FV502, except in situations of adverse topography. When approved by the City, the Engineer of Record may utilize an "offset" or unequal crown section when the existing ground slope exceeds 8.00% across the roadway section.

The offset crown design shall meet the following conditions:

1. Minimum distance from "crown" to (one) face of curb is 10.00-feet.
2. Maximum cross-slope of pavement is 5.00%, except for horizontal curves. On horizontal curves, maximum reverse superelevation is 2%.
3. Maximum differential in top of curb elevation from one side to the other is 1.00-foot.

The existing ground "side-slope" criteria are based on the relationship of the slope of the ground to the transverse slope of the roadway profile. This relationship shall be met for the entire length of the roadway alignment utilizing an offset crown. Other non-standard cross-sections such as "shed roof", "saw tooth", etc., may also be approved by the City.

5.10.14 Streetlighting

A complete lighting system (including, but not limited to: conduits, wiring, bases, wooded poles, arms, and fixtures) shall be the financial responsibility of the applicant. The developer will be responsible for providing the arterial luminaries in those cases where the developer is required to improve a collector or arterial street. The following identifies the mounting height and brightness requirements.

The City shall review and approve the design and location prior to construction approval. It is City policy that all development requiring Right-of-Way improvements shall be responsible for undergrounding and street light upgrades. Lighting/Undergrounding must follow the City's most current plan. In most cases, placement of new lighting on existing PGE poles is not acceptable. In cases where undergrounding is not practicable as determined by the City, the City may elect to accept a fee in lieu of the improvements for future extensions or undergrounding.

Roadway Type	Mounting Height (Ft)	Brightness
Principal/Major Arterial	35-40	55,000 lumens mercury vapor (1,000 watts) or 48,000 lumens sodium vapor (400 watts)
Minor Arterial	30-35	21,000 lumens mercury vapor (400 watts) or 25,000 lumens sodium vapor (250watts)
Major Collector	25-30	7,000 lumens mercury vapor (175watts) or 9,500 lumens

		sodium vapor (100 watts)
Neighborhood Collector/Local	25	7,000 lumens mercury vapor (175 watts) or 5,800 lumens sodium vapor (70 watts)

A complete streetlighting system shall be the responsibility of the developer. All streets fronting the property and pedestrian accessways shall be provided adequate lighting as determined by the City. For lighting requirements, all developments will be required to submit a lighting plan to the Project Manager. The lighting plan shall conform to IESNA RP-8 (Illuminating Engineering Society of North America) American National Standard Practice for Roadway Lighting.

5.10.15 Street Signs

All signing shall be in accordance with the latest revision of the Manual on Uniform Traffic Control Devices and shall be approved by the City. The City shall install all street signs and the applicant shall pay for the signs, installation, and administration prior to the issuance of certificate of substantial completion. In addition, the applicant may be required to pay for traffic safety devices as related to the development. The type and location of the street signs and/or traffic safety devices shall be approved by the City.

5.10.16 Street Trees

Street trees in the public right-of-way, or within the setback and/or buffer area immediately adjacent to the right-of-way, will be required of all developments. The particular species will be reviewed and approved as part of overall project submittals. A deposit for street trees to assure installation of the trees prior to occupancy may be required at the time of building permit issuance. Refer to Chapter 19.163 of the City of Fairview Municipal Code for detailed street tree standards.

Minimum caliper of street trees shall be 1 ½. Street trees shall not be located within the portion of the clear vision area approaching an intersection. Street trees located in the portion of the clear vision area leaving the intersection shall be a minimum of 2-inch caliper and a minimum of 8-feet head height at time of planting. Newly-planted trees shall be securely staked for the first 2-years after planting and shall be replaced if they die or are destroyed.

Roadway Type	Tree Spacing
Collector	20-feet
Local Residential	30-feet
Local Commercial	20-feet
Local Industrial	20-feet

Spacing required may vary depending on site and/or topography constraints. Distances include linear section of cul-de-sac. Street trees shall be located at least 15 feet from streetlights and stormwater catch basins and at least 5 feet from driveway cuts and underground utilities.

Recommended Street Trees

<u>Trees for a 2-foot to 4-foot planting strip:</u>

Paperbark Maple*
Allegheny Serviceberry*
Crimson Cloud Hawthorn*
Adirondack Crabapple*
Red Jewel™ Crabapple*
Japanese Tree Lilac*
Ivory Silk Tree Lilac*

Trees for a 3-foot to 6-foot planting strip:

Hedge Maple*
Rocky Mountain Glow® Maple*
Columnar Norway Maple
Crimson Sentry Norway Maple*
Olmstead Maple
Apollo® Maple*
Lavalle Hawthorn*
Flowering Ash
Golden Desert® Ash*
Professor Sprenger Crabapple*
Tschonoskii Crabapple
American Hophornbeam
Newport Plum*
Columnar Sargent Cherry*
Pink Flair™ Cherry*
Royal Burgundy Cherry

Trees for 4-foot planting strip or wider:

Queen Elizabeth™ Maple
Easy Street™ Maple
Superform Maple
Bowhall Maple
New World Maple
Scarlet Sentinel® Maple
Norwegian Sunset® Maple
Pacific Sunset® Maple*
European Hornbeam
Pyramidal European Hornbeam
Frans Fontain Hornbeam
Skyline® Ash
Tricolor Beech
Autumn Gold Ginkgo
Princeton Sentry® Ginko
Saratoga Ginkgo
Skyline® Honeylocust
Kwanzan Cherry* (on a 6-foot minimum graft)
Cleveland Select Pear
Chanticleer® Pear
Forest Green® Oak
Pyramidal English Oak
Skyrocket® Oak
Chancellor® Linden
Mushshino Zelkova
Wireless™ Zelkova*

Asterisk indicates trees allowed to be planted under power lines.

5.15 ALLYES AND PRIVATE RESIDENTIAL STREETS/ACCESSWAYS

5.15.01 Alleys

Alleys may be provided in commercial, industrial, and residential developments with approval of the City. Design for alleys shall meet the same criteria as other public streets. Centerline radius and design speed shall be the same as a minor access street. Alleys shall be designed for one-way operation.

Alleys must begin and end at connections with streets classified between and including collectors and queuing streets. All lots must have frontage to a public street, other than an alley, unless otherwise allowed by FCDC. The length of any alley shall not exceed 400 feet. If there are parking restrictions on the fronting public street or there is no fronting public street, additional parking spaces must be provided off of the alley.

Alleys may be designed and constructed to be minor alleys unless one or more of the following conditions are met whereupon the alley shall be designed and constructed as a major alley:

1. The alley is in a commercial or industrial zone
2. The alley is longer than 200’
3. There are public utilities in the alley
4. The alley is designed with a horizontal curve

Alleys shall be dedicated to the City unless specified otherwise by the City.

5.15.02 Private Residential Streets

In general, private residential streets and accessways shall be provided for multi-family developments such as condominiums and apartments. “PRIVATE STREET” signage and driveway approach shall be placed at the intersection with the public street to clearly identify the private accessway.

5.20 DRIVEWAYS

Access to private property shall be permitted with the use of driveway curb cuts where curbs exist and with AC connections where no curbs exist. The access points with the street shall be the minimum necessary to provide access while not inhibiting the safe circulation and carrying capacity of the street. Driveways shall meet all applicable guidelines of the Americans with Disabilities Act (ADA).

On arterial and collector streets and above, one driveway per site frontage will be the normal maximum number. Double frontage lots and corner lots on these streets may be limited to access from a single street, usually the lower classification street. Commercial developments with frontage greater than 250-feet may request an additional driveway if needed. If additional driveways are approved by the City, a finding shall be made that no eminent traffic hazard would result, impacts on through traffic would be minimal, projected travel demands indicate it is in the interest of good traffic operations, and adequate street frontage exists to meet the driveway spacing standards of this section. Restrictions may be imposed on additional driveways, such as limited turn movements, shared access between uses, closure of existing driveways, or other access management actions.

A new driveway will not be allowed (measured to the driveway centerline):

1. Within 30-feet of any commercial property line except when it is a shared-use driveway serving 2 or more abutting properties;
2. Within 100-feet of the right-of-way of an intersecting arterial street;
3. Within 50-feet of the right of way of a non-arterial street;

4. When adequate sight distance cannot be provided.

Residential curb cuts shall be a minimum distance from adjacent property lines such that driveway curb wings and ramped sidewalk do not encroach on adjacent properties. Exceptions are allowed for shared driveways or when the lot is platted as a zero lot line or as an attached single-family lot.

Roadway Type	Driveway Spacing
Collector	100-feet
Local	45-feet

Minimum spacing can be adjusted with approval from the City if it prohibits access to site. Corner lot driveways in residential areas on a frontage that is less than 75-feet shall be located no more than 8-feet from the interior property line and shall be no more than 24-feet wide.

Driveway Type	Driveway Width (Min/Max) (Ft)
Commercial	12/36
Residential	12/24

A driveway width of 28-Feet is allowed for a 3-car garage with City approval.

For classification of collector and above, driveways adjacent to street intersections shall be located beyond the required queue length for traffic movements at the intersection. If this requirement prohibits access to the site, a driveway with restricted turn movements may be required.

Within commercial, industrial, and multi-family areas, shared driveways and internal access between similar uses are encouraged to reduce the access points to the higher classified roadways; to improve internal site circulation; and to reduce local trips or movements on the street system. Shared driveways or internal access between uses will be established by means of common access easements at the time of development.

5.25 SIDEWALKS

In general, new sidewalks with curbs are required for all development requiring a development permit. Sidewalks shall be buffered from the roadway to provide for the safety and comfort of pedestrians.

In general, private residential streets and accessways shall be provided for multi-family developments such as condominiums and apartments. “PRIVATE STREET” signage and driveway approach shall be placed at the intersection with the public street to clearly identify the private accessway.

5.25.01 Sidewalk Width

Roadway Type	Sidewalk Width	Planter Strip Width
Collector	5-feet	5-feet
Local Residential	5-feet	5.5-feet

Local Commercial/Industrial	5-feet	5-feet

Sidewalks shall be installed such that back of walk is 6-inches inside the right-of-way, except in cases where buildings abut the right-of-way in which cases the sidewalk will abut the building.

Sidewalks may meander within the dedicated right-of-way or outside of the right-of-way within an easement with the approval of the City.

Sidewalks shall have a maximum cross slope no greater than 1:50. Sidewalks shall be constructed with a continuous passage of 5-feet clear of all obstructions, including poles, mailboxes, signposts, etc. With the City's approval, utilities with facilities in the sidewalk may locate their facilities to be in conformance with a 36-inch minimum horizontal clearance. A 7-foot vertical clearance above the sidewalk shall be maintained.

Include handrails or fences to protect pedestrians when there is a vertical drop of 30-inches or greater adjacent to sidewalk.

5.25.02 Sidewalk Ramps

New street intersections shall incorporate 2 sidewalk ramps per corner, unless approved otherwise by the City. Retrofits shall incorporate ramps that line up with existing ramps, typically a single diagonal ramp. Where ADA ramps are non-existent opposite new ramps installed as part of new frontage construction, new ramps shall be constructed on the other side of the street in addition to the new ramps constructed as part of the frontage. Sidewalk ramps shall meet all applicable guidelines of the Americans with Disabilities Act (ADA), except as noted herein.

Locations of sidewalk ramps shall be designed with regard to stormwater flows, street grades, and pole locations. Other factors may also dictate sidewalk ramp location.

In areas of existing steep terrain, the City encourages the Engineer of Record to:

1. Utilize existing code provisions to eliminate sidewalk on one side of the street when permissible. This is permitted by development standards and will reduce the overall number of ADA ramps. However, designer will need to provide continuity in the pedestrian network.
2. Utilize existing standards that allow the flexible use of either one or two ADA ramps per corner.

The City will review cross slopes on construction plans as follows:

1. For street grades of less than 8%, cross slopes shall not exceed 2%.
2. For street grades equal to or greater than 8%, cross slopes of up to 5% will be permitted if considered reasonable in the engineering judgment of the City.
3. Cross slopes greater than 5% may be proposed in cases of technical infeasibility and will only be permitted if considered reasonable in the engineering judgment of the City.

The City will not approve cross slope more than 2% in advance of the submittal of construction plans. Written construction plans must be submitted to, reviewed, and approved by the City prior to construction

There may be rare cases in which circumstances justify a cross slope greater than 5%. The City will permit such cross slopes only if, in the exercise of the City's reasonable engineering judgment, the City determines that there are no other practical alternatives. The following considerations will apply to the exercise of reasonable engineering judgment by the City:

1. For cross slope of greater than 5%, the Engineer of Record must state that every effort has

been made to design a project with 5% cross slopes. Rough plans showing 5% cross slopes must be submitted with additional information to identify why the plan is not a practical alternative.

2. City approval shall include a disclaimer that City approval will not act as an agreement or obligation to indemnify anyone if an ADA violation is alleged.
3. The City will consider the following factors in determining whether allowing a cross slope greater than 2% is a reasonable exercise of engineering judgment.
    a. Street grades and width
    b. Anticipated vehicle speeds
    c. The nature of intersection controls
    d. Alternative accessible routes
    e. Permitted land uses in the area
    f. Impact on natural resources

The engineering judgment will be documented and approved by the City. If the cross slope exceeds 5%, the City's approval of the engineering judgment must also be obtained. See Standard Detail FV525 for additional details.

5.30 BICYCLE FACILITIES

The City has adopted the "Gresham Bicycle/Pedestrian Plan." This plan summarizes the City's policy and implementation strategies for bikeways within the City and for connection with metropolitan bikeways. The City's plan has adopted both AASHTO and ODOT standards and criteria as the minimum guidelines for bikeway design, construction, and control.

The City's adopted guidelines for bikeways consist of the following:

1. AASHTO, "Guide to Development of Bicycle Facilities" – latest edition
2. ODOT, "Oregon Bicycle & Pedestrian Plan" – latest edition
3. Manual on Uniform Traffic Control Devices with Oregon supplements by Oregon Transportation Commission – latest edition

5.30.01 Private Residential Streets

Roadway Type	Bikeway Width	Comments
Collector	6-feet	Each direction of travel at shoulder/curb

The 6-foot section is required unless this width is not practical because of physical or economic constraints as approved by the City. In the aforementioned case, a minimum width of 4-feet may be designated as a bicycle lane.

5.30.02 Pedestrian/Bicycle Accessway

Accessways are subject to the following design standards.

All rights-of-way for pedestrian and bicycle accessways shall be dedicated to the City for public use or may be approved as public access easements on private property. Accessways shall be maintained as part of the public right-of-way or by the underlying landowner if constructed as public easements over private land.

Right-of-way or easement width shall be 10-feet except that a 15-foot width is required for accessways that also provide for public utility corridors. Also, if an accessway provides secondary fire access, a minimum 20-foot width is required.

The City may approve accessways exceeding 200-feet in length if there is adequate right-of-way or easement width to provide for safe pedestrian and bicycle travel.

A clear-vision triangle, as specified in the Fairview Municipal Code Chapter 12.25.050E, shall be provided at the ends of all accessways. Accessways shall be straight enough to allow both ends of the accessway to be seen from the adjacent public streets and lighting must be provided. On-street parking shall be prohibited within 25-feet of the intersection of an accessway and a public street to preserve safe sight distance.

The construction of stairways shall be avoided whenever possible. Where the path grade would exceed 12% slope, an accessway will be constructed as stairs for pedestrians. Based on local conditions, the City may approve alternatives to stairs, including the use of switchbacks and alternative materials. If stairways are needed, they shall be at least 5-feet wide with handrails on both sides.

When required for buffering, accessways shall be fenced and screened along adjacent property lines. The area between the pathway and fences shall be planted with a combination of groundcover or low-growing shrubs that will reach no more than 2-feet high at maturity.

Accessways shall be designed to prohibit motorized traffic.

Off-street pedestrian/bicycle accessways shall be constructed for 2 different situations – where no vehicular use will occur and where heavy maintenance vehicle use will occur. In both cases, subgrade preparation will require removal of existing organic material in accordance with roadway construction.

When drainage such as side ditches is required parallel with the bikeway, the ditch centerline shall be at least 5-feet from the edge of the pavement and additional right-of-way or easement width may be required. Ditch side slope adjacent to the bikeway shall be no steeper than 2:1 when measuring the horizontal distance to the vertical distance.

When accessway crosses culverts, the ends of the pipe shall be no closer than 5-feet from the edge of the accessway.

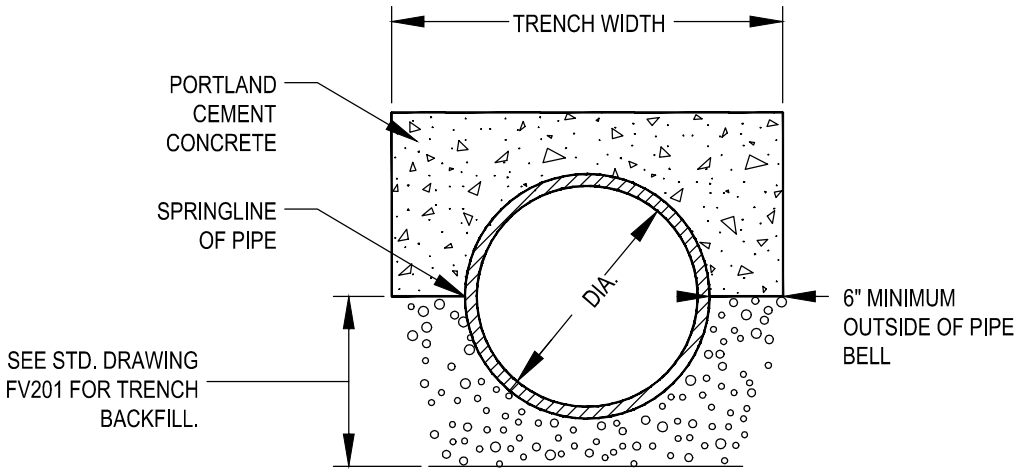

END VIEW

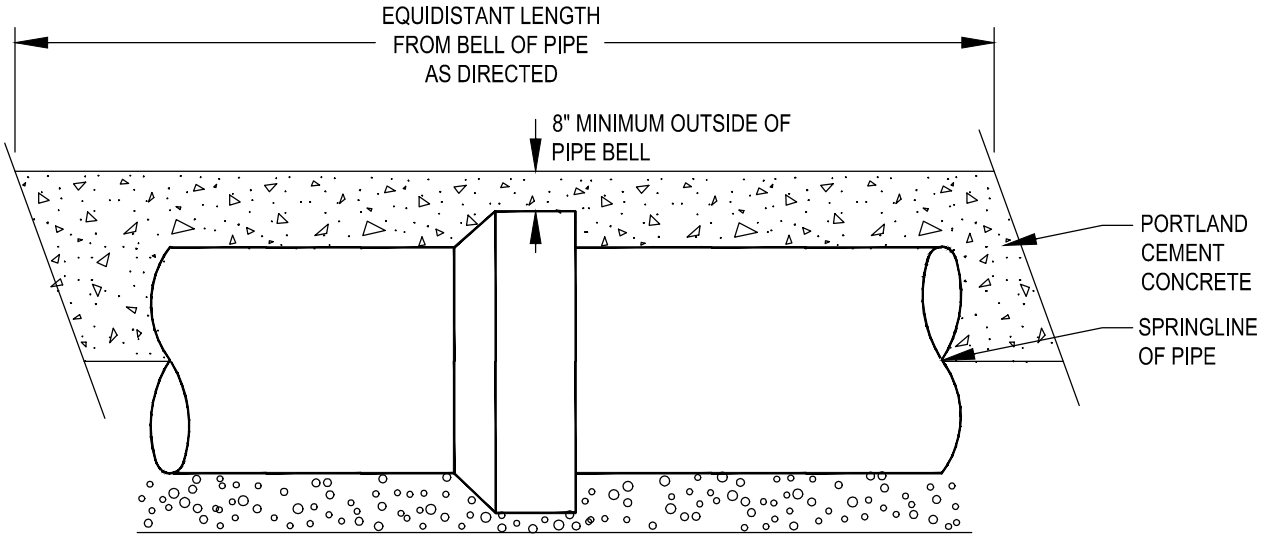

SIDE VIEW

NOTE:

1. DRAWING APPLIES TO SANITARY, STORM, AND WATER MAINS

CITY OF FAIRVIEW EST 1908 OREGON	CONCRETE CRADLE AND CAP SCALE: NTS	DETAIL NUMBER FV200
		REVISED MAR 23, 2017

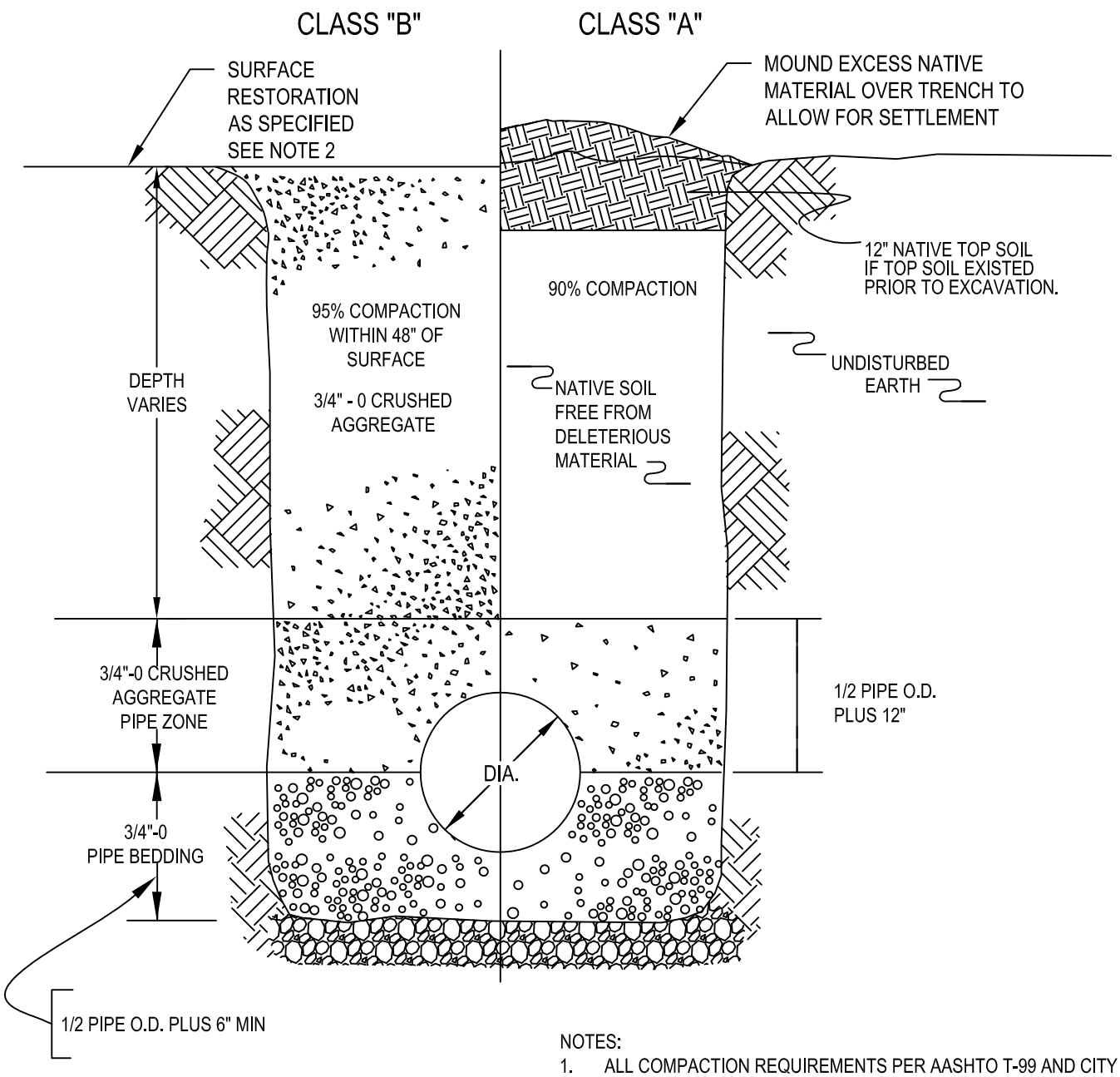

NOTES:

1. ALL COMPACTION REQUIREMENTS PER AASHTO T-99 AND CITY OF FAIRVIEW CONSTRUCTION SPECIFICATIONS.
2. SEE FV527 FOR STREET CUT AND REPAIRS.
3. WHEN GEOTEXTILE FABRIC IS USED IT SHALL BE PLACED BELOW RESURFACING IN "TEE CUT" AND EXTEND A MINIMUM OF 12" BEYOND TRENCH WALLS.
4. DO NOT COMPACT TOP 2" OF NATIVE BACKFILL IN AREAS TO BE SEEDED.
5. IF REQUIRED, TRENCH STABILIZATION SHALL BE SPECIFIED SEPARATELY AND PLACED PRIOR TO PLACEMENT OF BEDDING MATERIAL.

CITY OF FAIRVIEW EST 1908 OREGON	TRENCH BACKFILL SCALE: NTS	DETAIL NUMBER FV201
		REVISED MAR 23, 2017

NOTES:

1. PIPE ANCHORS MUST BE USED WITH PIPES ON SLOPES OVER 20%.
2. CONCRETE ANCHORS TO BE INSTALLED IMMEDIATELY DOWNHILL OF PIPEBELL, AND EQUALLY SPACED.

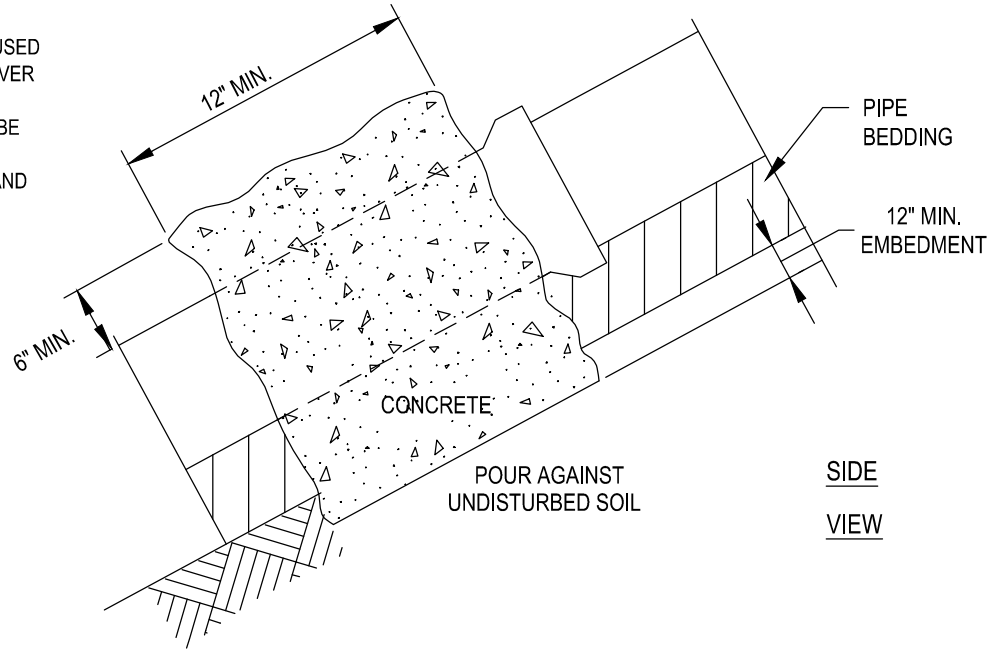

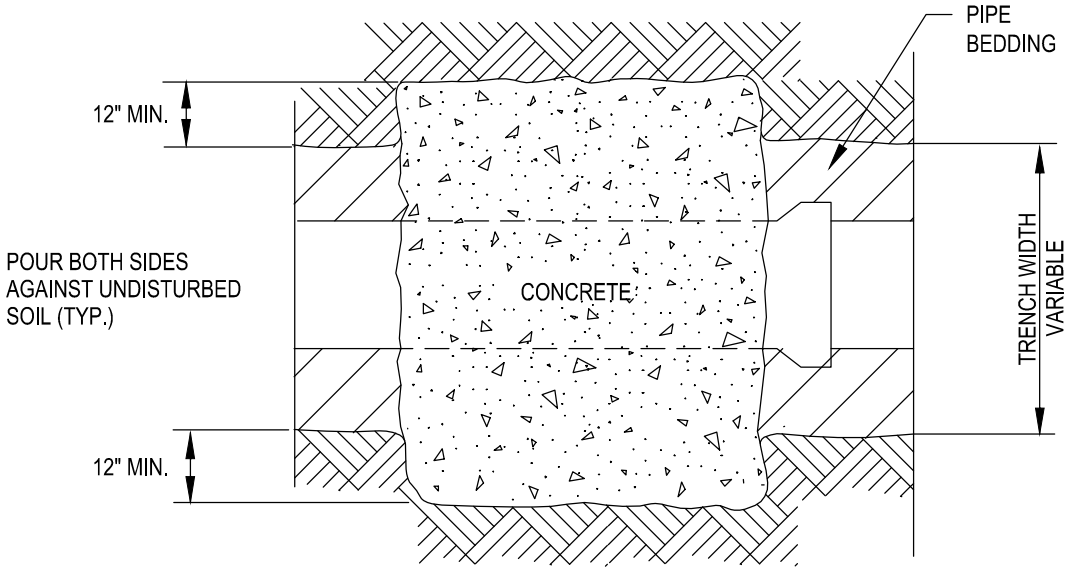

PLAN

SLOPE	MIN. ANCHOR SPACING CENTER TO CENTER
20% - 34%	35'
35% - 50%	25'
51% +	15' OR CONC. ENCASEMENT

CITY OF FAIRVIEW EST 1908 OREGON	PIPE ANCHOR SCALE: NTS	DETAIL NUMBER FV202
		REVISED MAR 23, 2017

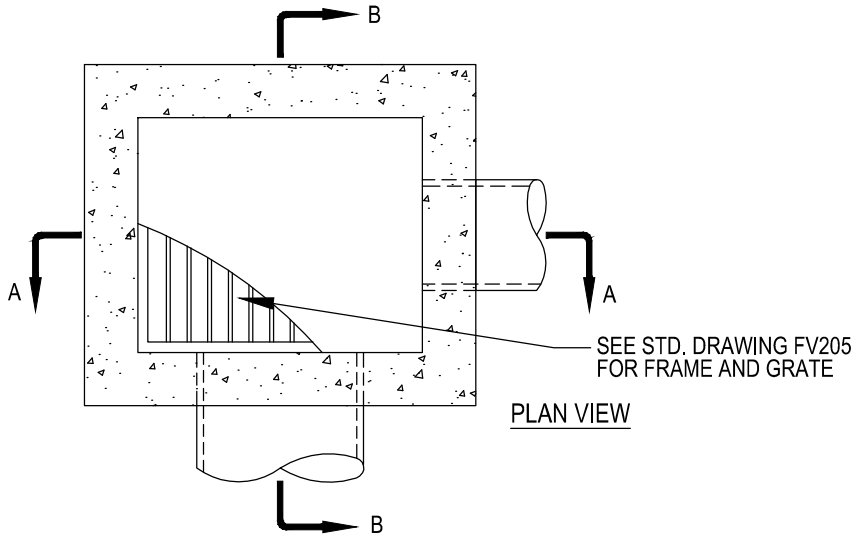

PLAN VIEW

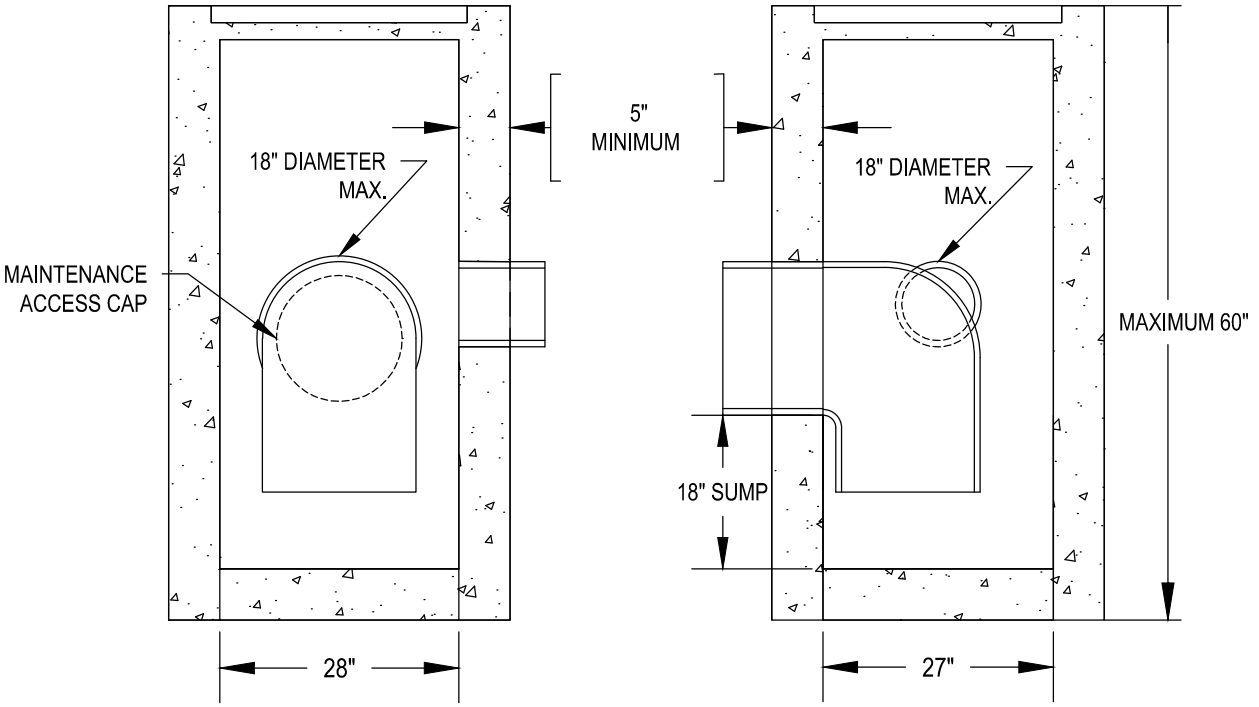

SECTION A-A

SECTION B-B

NOTES:

1. ALL PRE CAST SECTIONS SHALL CONFORM TO REQUIREMENTS OF ASTM C-478.
2. INSTALL STRUCTURE ON MIN. OF 8" OF 3/4"-0" COMPACTED CRUSHED AGGREGATE.
3. PRE CAST REINFORCEMENT SHALL BE REBAR MEETING ASTM A615 GRADE OR WELDED WIRE MEETING ASTM A497.
4. CHANNEL REQUIRED IN FLOW THROUGH APPLICATIONS, AS APPROVED. ALL OTHER APPLICATIONS REQUIRE AN 18" SUMP BELOW LOWEST PIPE INVERT.
5. ALL GRATE MATERIALS SHALL MEET CITY OF FAIRVIEW STANDARDS AS SHOWN ON DETAIL FV205.

CITY OF FAIRVIEW EST 1908 OREGON	AREA DRAIN TYPE II SCALE: NTS	DETAIL NUMBER FV203
		REVISED MAR 23, 2017

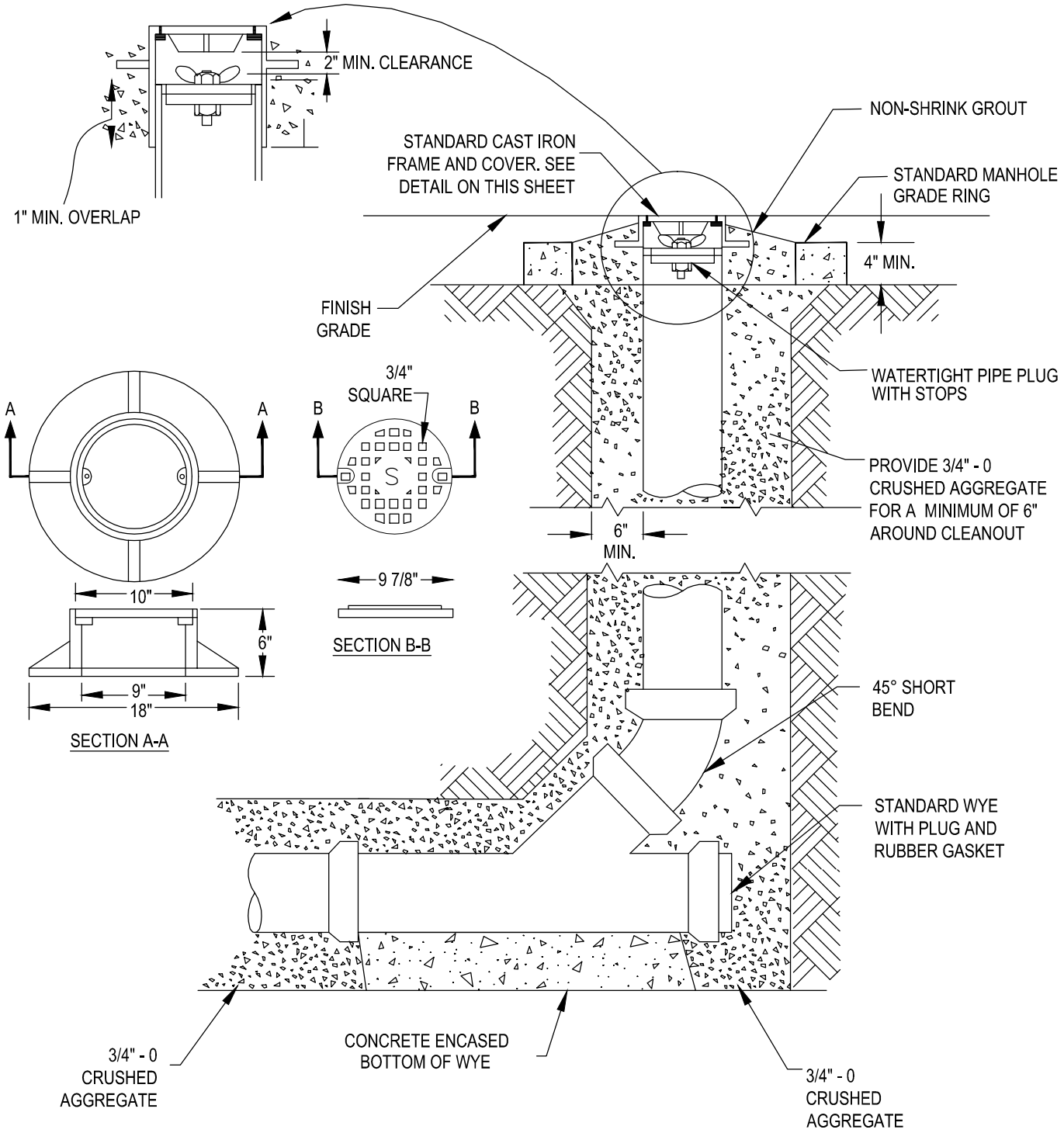

NOTE:

1. STAND PIPE TO BE SAME SIZE AS MAINLINE UP TO AND INCLUDING 8" PIPE. MAINLINE GREATER THAN 8" SHALL HAVE A 8" STANDPIPE.
2. FRAME AND COVER SHALL BE GRAY CAST-IRON, ASTM A-48, CLASS 30.
3. ALL PERMANENT CLEANOUTS TO HAVE BOLT DOWN COVER.

CITY OF FAIRVIEW EST 1908 OREGON	END OF MAINLINE CLEANOUT SCALE: NTS	DETAIL NUMBER FV204
		REVISED MAR 23, 2017

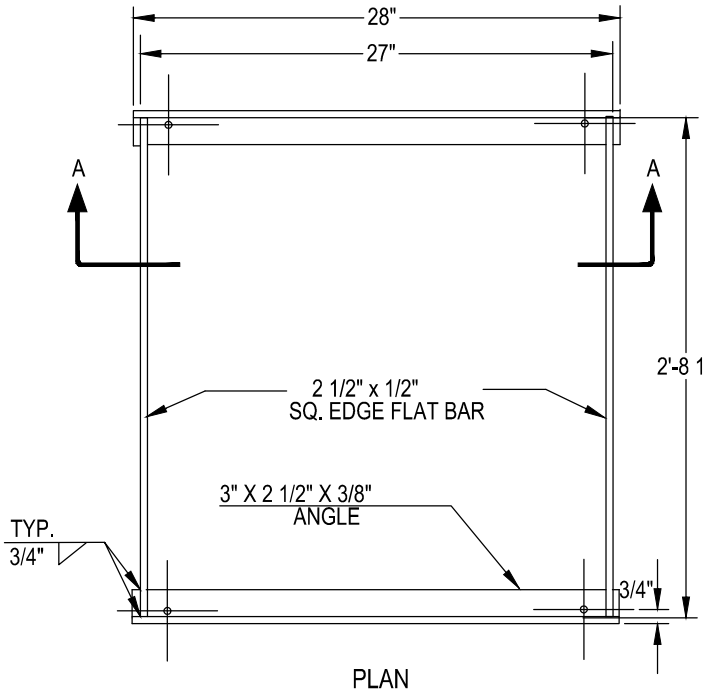

PLAN

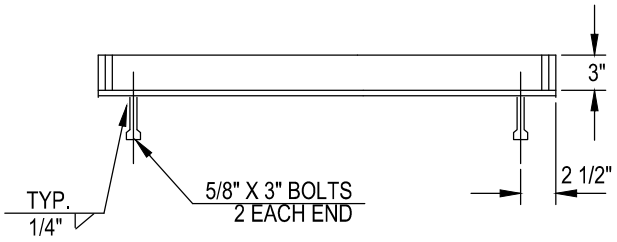

SECTION A-A

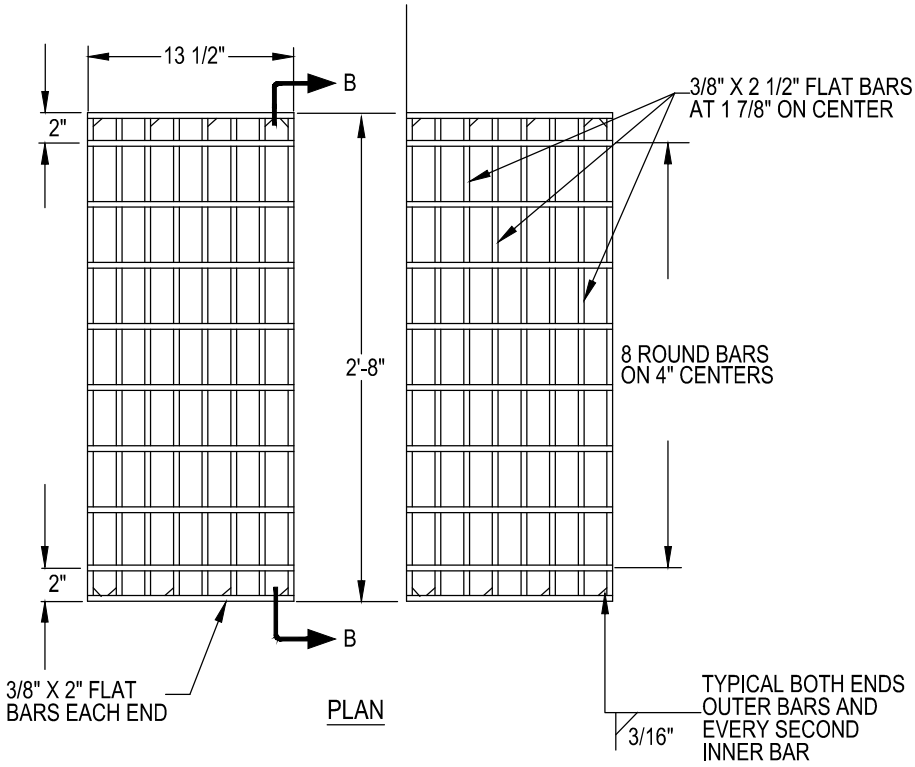

PLAN

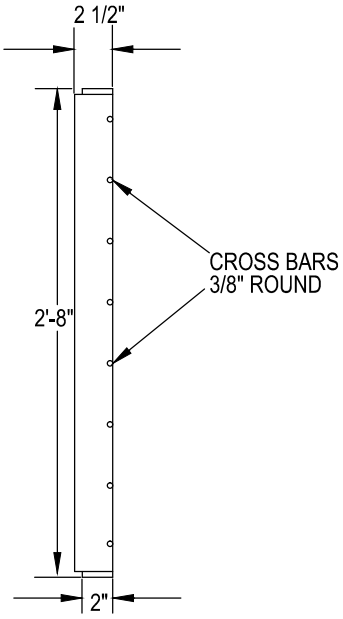

SECTION B-B

NOTE:

1. FRAME AND GRATE TO BE NEW STRUCTURAL ASTM A-36 FLAT BAR STEEL OR APPROVED EQUAL.
2. ADDITIONAL THICKNESS AND REINFORCEMENT SHALL BE REQUIRED FOR STATE HIGHWAY APPLICATIONS.

CITY OF FAIRVIEW EST 1908 OREGON	CATCH BASIN FRAME AND GRATE SCALE: NTS	DETAIL NUMBER FV205
		REVISED MAR 23, 2017

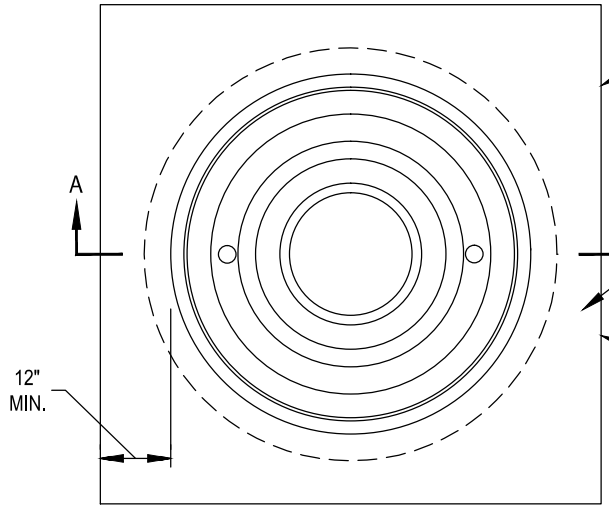

SAW CUT SQUARE AND REMOVE PAVEMENT 2-FOOT MINIMUM LARGER THAN MANHOLE FRAME DIMENSION

REPLACE WITH 3-INCH THICK CLASS "C" MIX A.C. OR CONCRETE AS REQUIRED BY THE CITY

APPLY TACK COAT TO EDGES OF EXISTING PAVEMENT BEFORE INSTALLING PATCH. FINISH JOINT WITH ASPHALTIC SEAL AND SAND.

PLAN

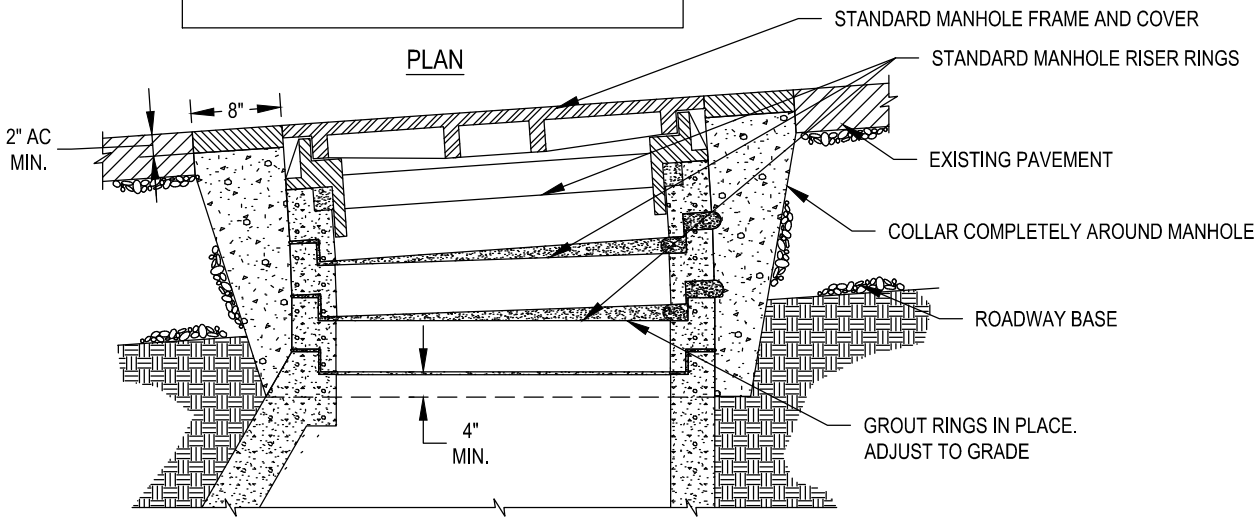

SECTION A-A

TYPICAL MANHOLE GRADE ADJUSTMENT IN STREET

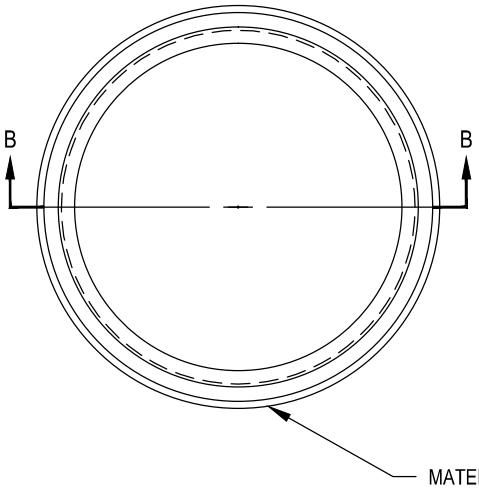

MATERIAL SHALL BE CAST IRON

MANHOLE ADJUSTMENT RINGS FOR RESURFACING

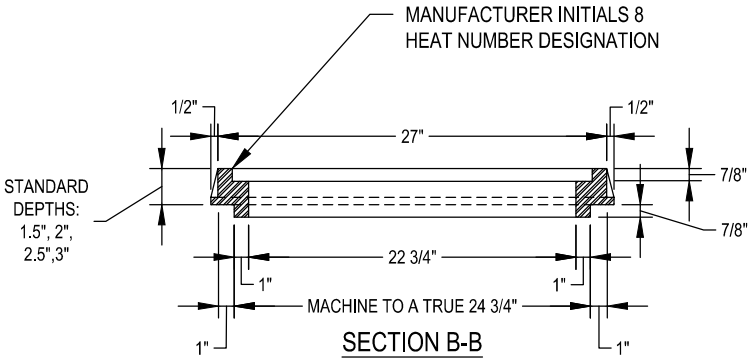

SECTION B-B

CITY OF FAIRVIEW EST 1908 OREGON	MANHOLE RISER AND GRADE RINGS SCALE: NTS	DETAIL NUMBER FV206
		REVISED MAR 23, 2017

WATERTIGHT MANHOLE RING

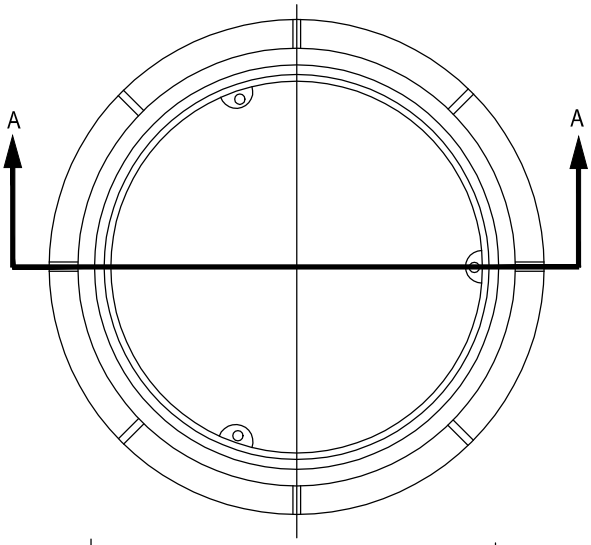

3-BOLT DOWN COVER

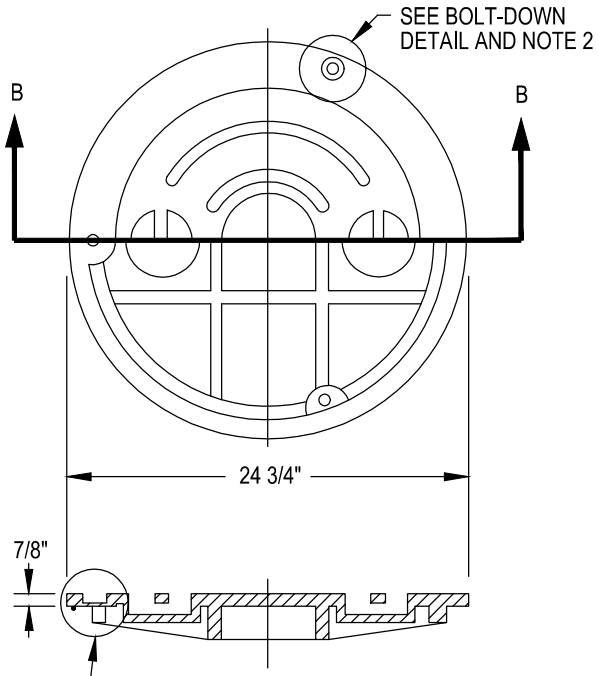

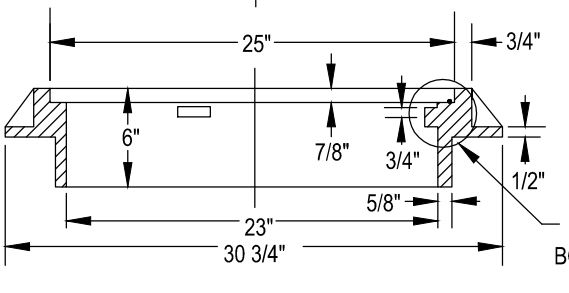

SECTION B-B

SECTION A-A

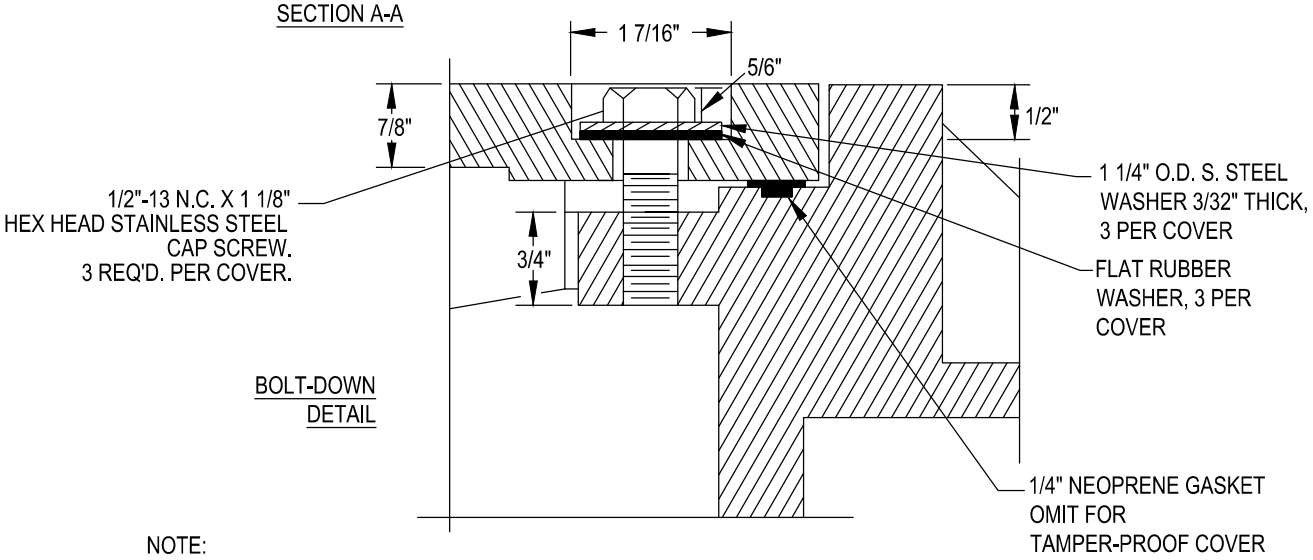

NOTE:

1. COVER AND FRAME SHALL BE GRAY CAST IRON A.S.T.M. A-48 CLASS 30. TAMPER PROOF (REMOVE GASKETS).
2. BOLT-DOWN TYPE MANHOLE COVERS NOT REQUIRED FOR IN-ROAD LOCATIONS .
3. TAMPER PROOF MANHOLE FRAME AND COVER SHALL BE USED IN ALL EASEMENT AND OFF STREET AREAS.
4. WATERTIGHT COVERS REQUIRED IF LOCATED WHERE COVER MAY BE SUBMERGED.
5. SANITARY SEWER COVERS TO HAVE 2 HOLES MAXIMUM.

CITY OF FAIRVIEW EST 1908 OREGON	MANHOLE COVER AND FRAME SCALE: NTS	DETAIL NUMBER FV207
		REVISED MAR 23, 2017

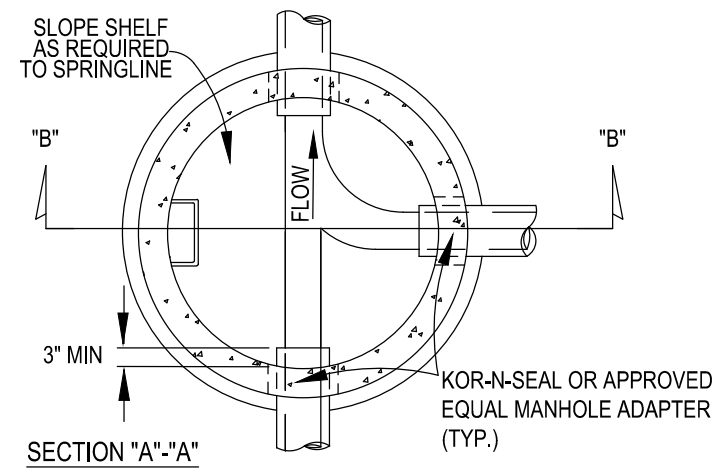

SECTION "A"-"A"

NOTES:

1. MAXIMUM FLOW IS 3 C.F.S. FOR INSIDE DROP MANHOLE. IF GREATER THAN 3 C.F.S. NO DROP IS ALLOWED.
2. FOR A 48" DIA. MANHOLE THE MAXIMUM INCOMING PIPE DIAMETER IS 15". A LARGER DIAMETER INCOMING PIPE WILL REQUIRE A SPECIAL DESIGN.
3. STANDARD TYPE MANHOLE SHOWN. FLATTOP MANHOLE SIMILAR.
4. ONLY ONE DROP CONNECTION WILL BE ALLOWED PER MANHOLE.
5. APPROVAL IS REQUIRED BY THE CITY FOR ALL DROP CONNECTIONS.
6. INSTALL 45° BEND WITH 1 1/2" x 10 GA STAINLESS STEEL STRAPS, CONSTRUCT CONCRETE GROUT FILLET CHANNEL TO DIRECT FLOW. ANCHOR SECURELY, SO AS NOT TO FLAKE OR SPALL OUT OF PLACE.
7. STANDARD MANHOLE STEPS SHALL BE ORIENTED OVER THE LEAST OBSTRUCTED PORTION OF THE SHELF AND SHALL NOT CONFLICT WITH ANY PIPE OR APPURTENANCE.
8. DROP PIPE SHALL BE PVC FLUSH WITH INSIDE OF MANHOLE BARREL, FASTENED TO WALL WITH 1 1/2" X 10 GA STAINLESS STEEL STRAPS AND 2 1/2" CADMIUM PLATED BOLTS. STRAPS SHALL BE SPACED EVERY 4 FEET WITH A 2 STRAP MINIMUM.

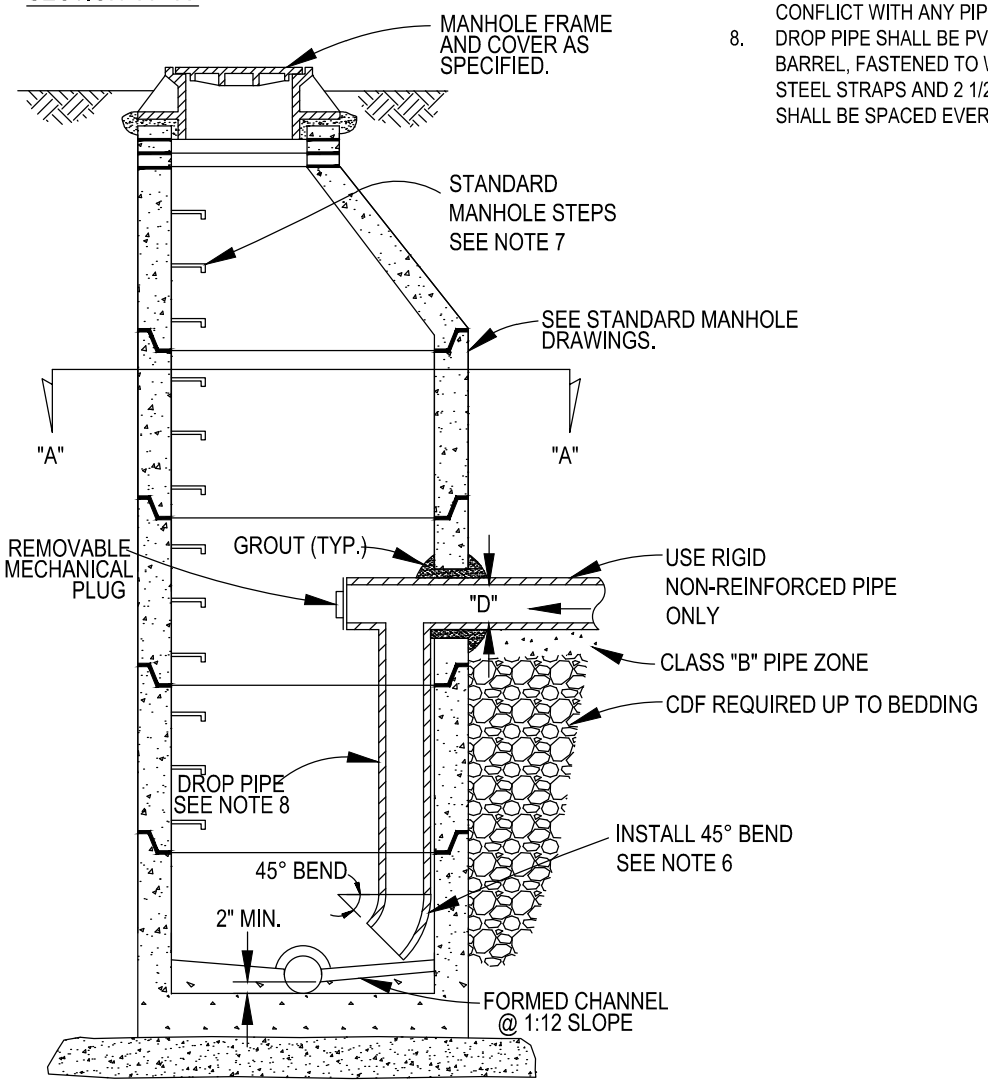

SECTION "B"-"B"

CITY OF FAIRVIEW EST 1908 OREGON	INSIDE DROP MANHOLE SCALE: NTS	DETAIL NUMBER FV210
		REVISED MAR 23, 2017

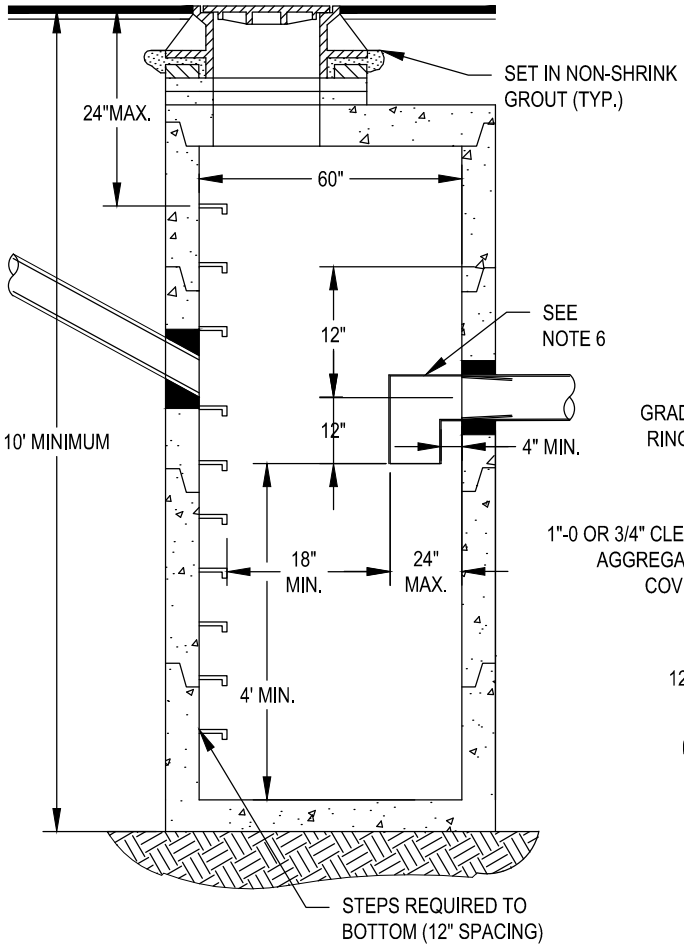

SEDIMENTATION MANHOLE

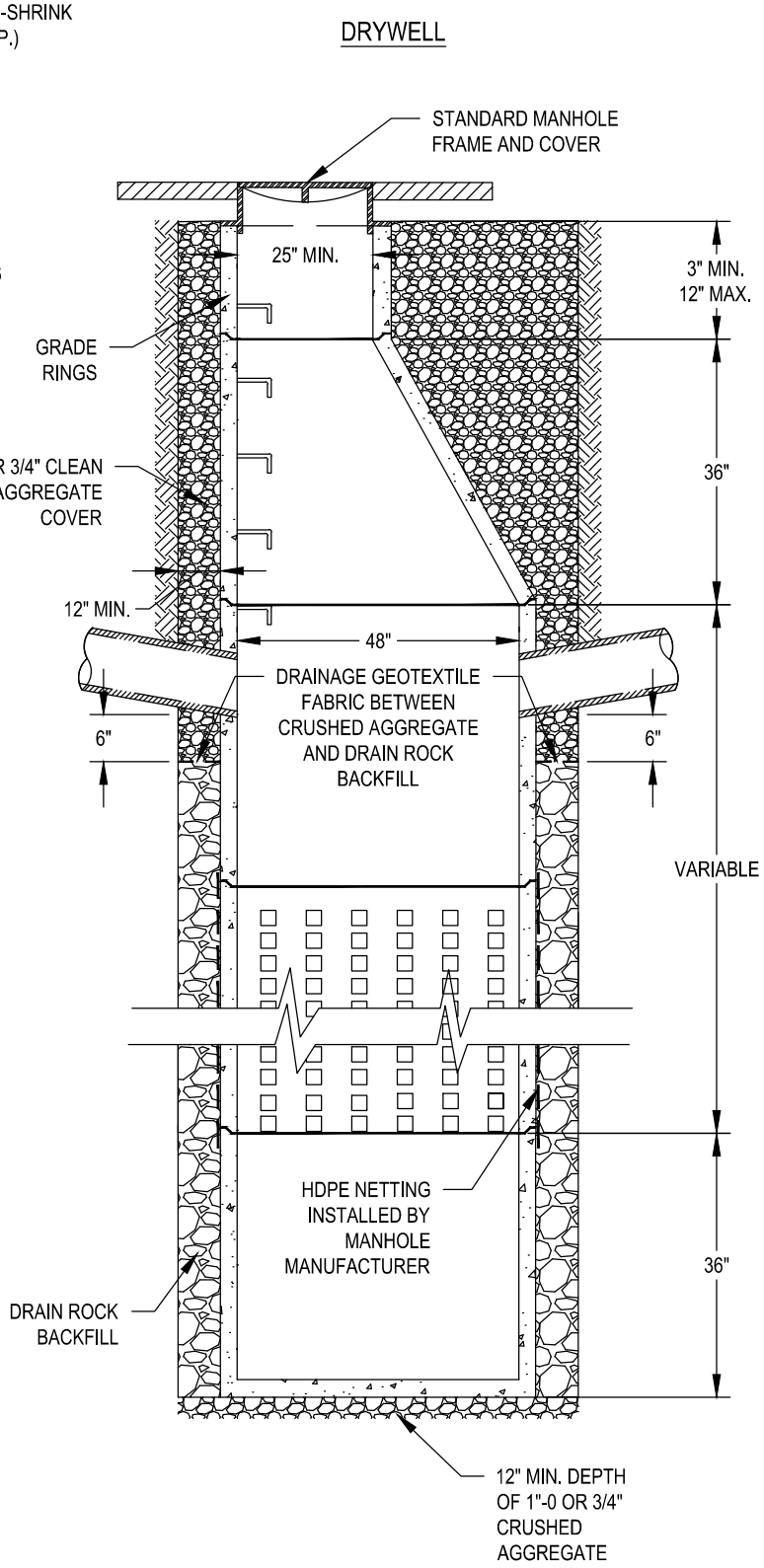

NOTES:

1. ALL PRECAST SECTIONS SHALL CONFORM TO THE REQUIREMENTS OF THE CITY OF FAIRVIEW MANUFACTURING STANDARDS FOR PRECAST CONCRETE PRODUCTS.
2. PROVIDE 6 INCHES CLEAN AGGREGATE COVER MATERIAL AROUND ALL CONNECTING PIPE.
3. DO NOT CONNECT PIPE TO ANY PERFORATED SECTION. PROVIDE 48 INCHES OF SEPARATION BETWEEN THE CONE BASE AND ANY WEEP HOLES.
4. PROVIDE A FLEXIBLE JOINT FOR ALL CONNECTING PIPES:
   - 4.1. RIGID PIPE < 36 INCHES: 18 INCHES (MAX.) FROM OUTSIDE WALL.
   - 4.2. FLEXIBLE PIPE: 18 INCHES (MAX.) FROM THE OUTSIDE WALL UNLESS FLEXIBLE JOINT FITTING IS INSTALLED AND ACCEPTED.
5. PROVIDE 12 INCHES (MIN.) OF SEPARATION BETWEEN A SECTION JOINT AND THE OUTER EDGE OF ANY OPENING.
6. 12" 90° SHORT RADIUS ELBOW PER ASTM D-1248, SDR 26 PLAIN END. ELBOW SHALL BE CONNECTED TO STORM PIPE WITH 1/8" ROLLED TAPER (WELD OD) AND ANCHORED TO MANHOLE WALL WITH STAINLESS STEEL STRAP.
7. ALL UNDERGROUND INJECTION STRUCTURES MUST BE REGISTERED WITH THE DEPARTMENT OF ENVIRONMENTAL QUALITY.

CITY OF FAIRVIEW EST 1908 OREGON	DRYWELL & SEDIMENTATION MANHOLE SCALE: NTS	DETAIL NUMBER FV213
		REVISED MAR 23, 2017

NOTES:

1. ALL PRECAST MANHOLE RISER SECTIONS SHALL CONFORM TO THE REQUIREMENTS OF *ASTM C 478*.
2. ALL JOINTS SHALL BE SEALED WITH PREFORMED GASKETS SUCH AS *KENT-SEAL #2, RAM-NECK*, OR AN APPROVED EQUAL CONFORMING TO *FEDERAL SPECIFICATION* SS-S00210.
3. ALL PIPE CONNECTIONS TO MANHOLE SHALL BE WATERTIGHT.
4. PIPE CONNECTIONS OF 24 INCHES OR GREATER SHALL REQUIRE A MANHOLE AND CHANNEL DETAIL.
5. PIPE CONNECTIONS OF FOUR OR MORE MAINLINES SHALL REQUIRE A MANHOLE CONNECTION AND CHANNEL DETAIL.
6. PROVIDE A MINIMUM OF 8 INCHES OF INTACT (UNDISTURBED) MANHOLE WALL BETWEEN PIPE BREAKOUTS AS MEASURED ON THE INSIDE FACE OF THE MANHOLE.
7. BREAKOUT OF WALL FOR PIPE SHALL BE 2 INCHES MINIMUM AND 4 INCHES MAXIMUM CLEAR OF PIPE WALL.
8. WATERTIGHT / TAMPER PROOF MANHOLE FRAME AND COVER SHALL BE USED IN ALL EASEMENT AND OFF STREET AREAS.
9. NO MORE THAN 8 INCHES OF CONCRETE GRADE RINGS SHALL BE USED TO ADJUST ANY MANHOLE TO GRADE.
10. METAL PAVING RINGS/RISERS ARE NOT ALLOWED, EXCEPT AS NECESSARY DURING A PAVEMENT OVERLAY PROJECT, AND THEN ONLY ONE (1) PAVING RING IS ALLOWED.
11. MINIMUM FALL BETWEEN INLET AND OUTLET TO BE NOT LESS THAN 0.10 FEET.
12. THE CITY RESERVES THE RIGHT TO DEVIATE FROM THIS DRAWING AND RELATED REQUIREMENTS IN THE *DESIGN STANDARDS* AS DICTATED BY PROJECT DESIGN PARAMETERS, AND AS APPROVED BY THE CITY.
13. TOP OF MH SHALL BE 12" ABOVE EXISTING GROUND IN UNPAVED SURFACES. TOP OF MH TO BE FLUSH WITH TOP OF FINISH GRADE IN PAVED AREAS.
14. MANHOLES LOCATED ON ROAD SHOULDER(S) NOT PAVED MUST BE ENCLOSED IN A CONCRETE APRON ON 2" OF CRUSHED AGGREGATE. SLOPE APRON AWAY FROM MANHOLE AT A MINIMUM OF 2%.
15. ALL MANHOLES SHALL BE VACUUM TESTED AND PASSED PRIOR TO ACCEPTANCE BY THE CITY.

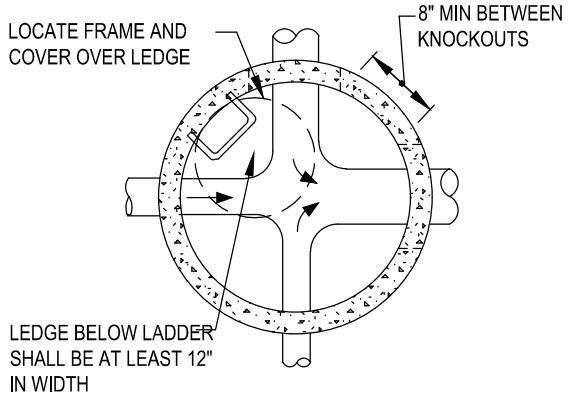

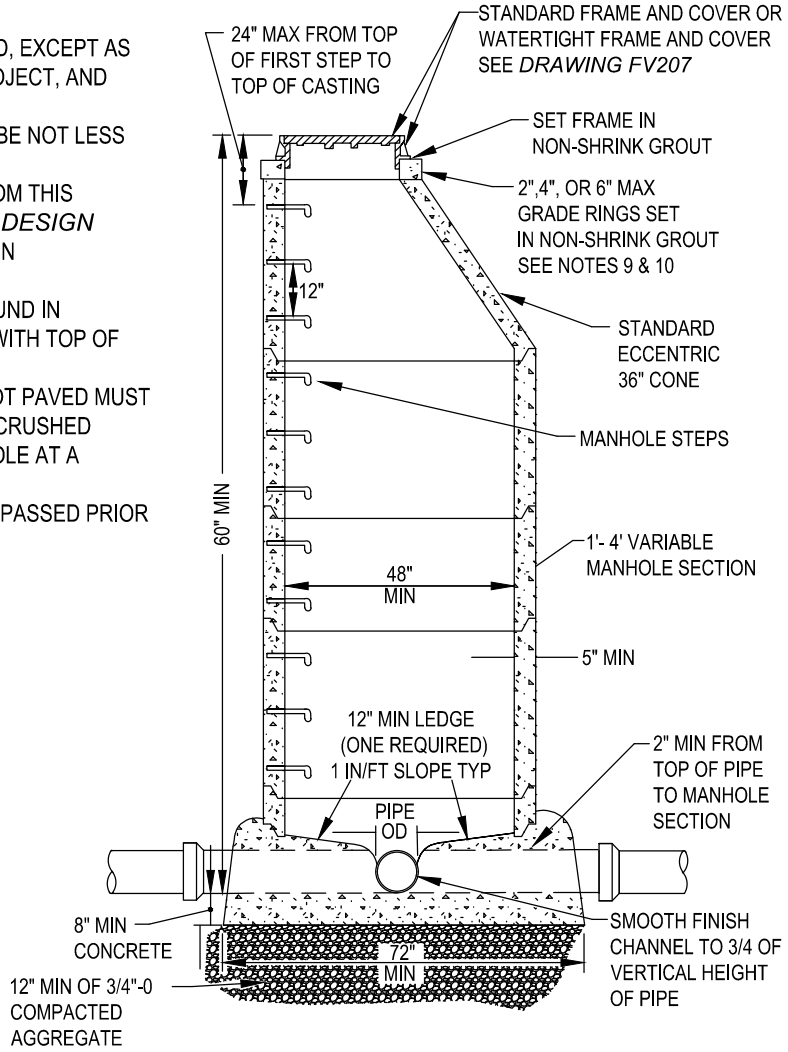

CITY OF FAIRVIEW EST 1908 OREGON	STANDARD MANHOLE SCALE: NTS	DETAIL NUMBER FV216
		REVISED MAR 23, 2017

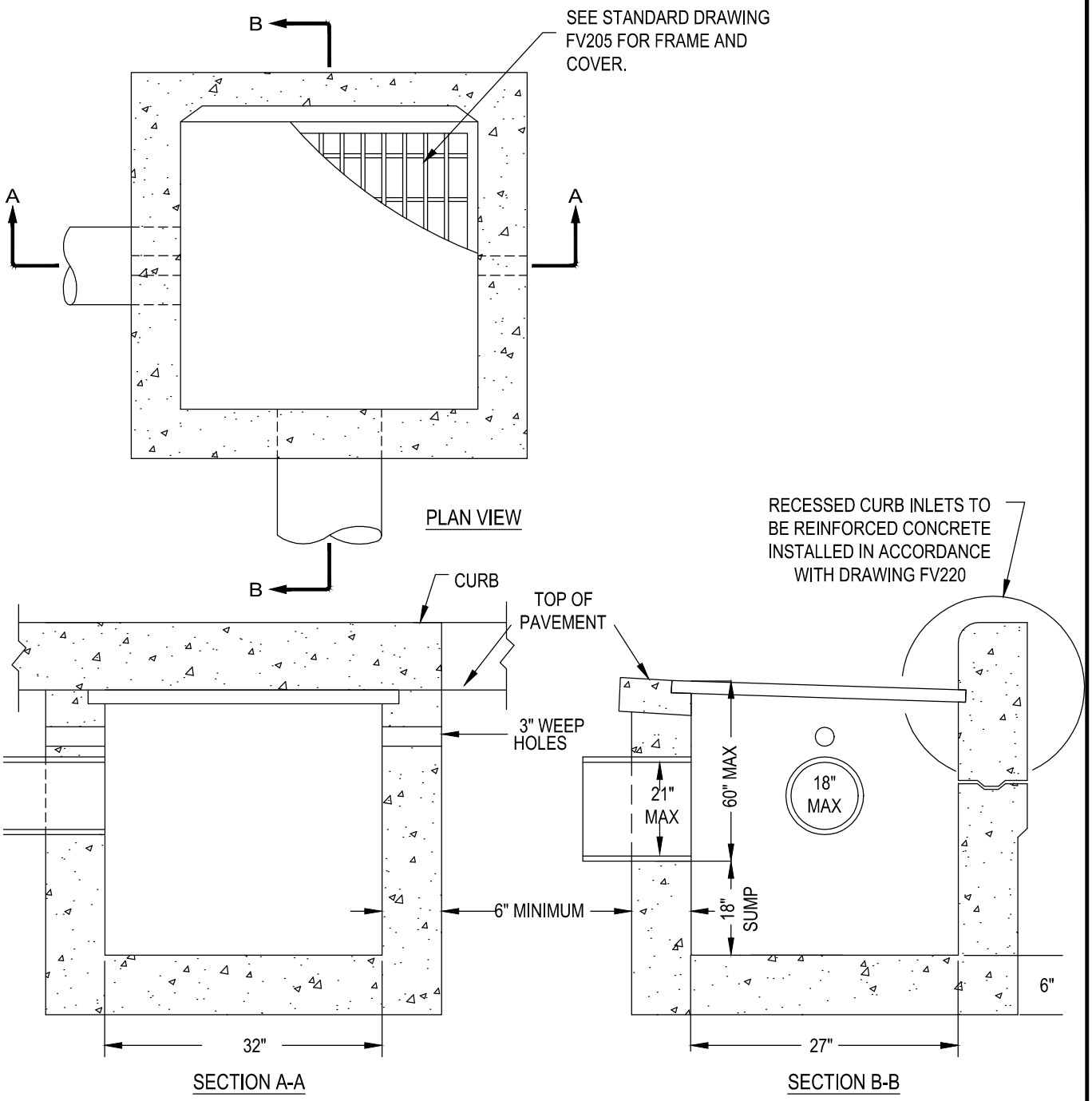

NOTES:

1. CATCH BASIN SHALL BE CONSTRUCTED IN ACCORDANCE WITH ASTM C-478.
2. INSTALL STRUCTURE ON MINIMUM OF 8" OF ¾"-0" COMPACTED AGGREGATE.
3. REINFORCEMENT FOR PRE CAST CATCH BASIN SHALL BE REBAR MEETING ASTM A-615 GRADE 60 OR WELDED WIRE MEETING ASTM A-497.
4. CHANNEL REQUIRED IN FLOW THROUGH APPLICATIONS, AS APPROVED. ALL OTHER APPLICATIONS REQUIRE AN 18" SUMP
5. BELOW LOWEST PIPE INVERT.
6. FULL CURB EXPOSEURE REQUIRED CANNOT BE LOCATED IN SIDEWALK RAMPS OR RAMP WINGS.

CITY OF FAIRVIEW EST 1908 OREGON	CATCH BASIN SCALE: NTS	DETAIL NUMBER FV218
		REVISED MAR 23, 2017

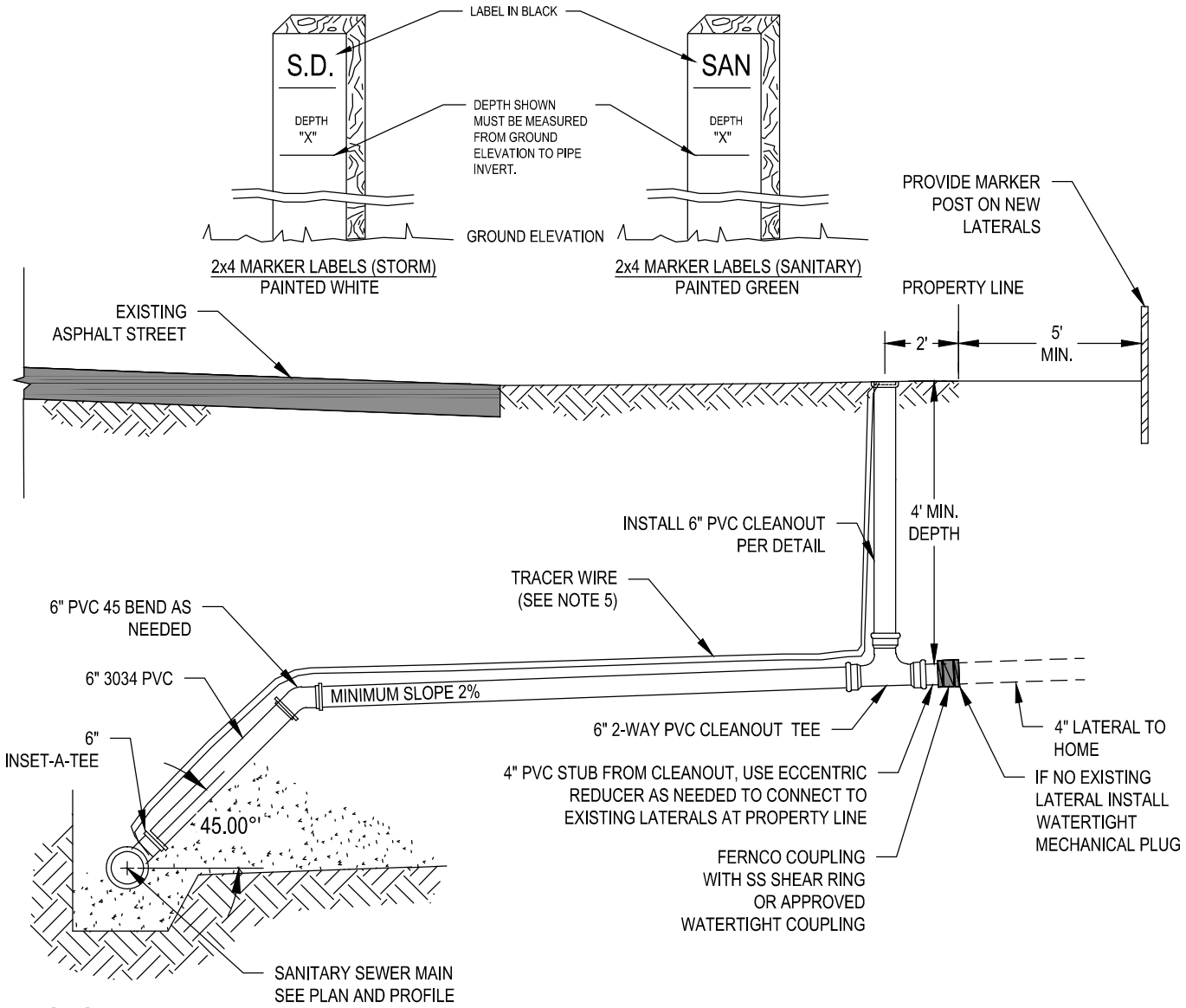

NOTES:

1. PROVIDE FERNCO COUPLING WITH STAINLESS STEEL SHEAR RING AT CONNECTION TO 2-WAY PVC TEE.
2. WHEN REQUIRED, CLEANOUTS SHALL BE INSTALLED AT 100' INTERVALS.
3. VERTICAL DROPS INTO SEWER MAIN ARE NOT PERMITTED.
4. SEWER LATERAL INSTALLATIONS SHALL BE INSPECTED PRIOR TO BEING BACKFILLED.
5. INSTALL TRACER WIRE (GREEN, 18 GAGE, INSULATED COPPER) FROM THE MAINLINE TO THE CLEANOUT SO THAT BOTH ENDS OF A SINGLE CONDUCTOR ARE AT CLEANOUT. TIE TRACER WIRE TO THE TOP OF THE CAP BEFORE BURYING.
6. CONTRACTOR TO POTHOLE LOCATION OF LATERAL CONNECTION AT RIGHT-OF-WAY AND UTILITY CROSSINGS AS NEEDED TO SET LINE AND GRADE AND AVOID CONFLICTS.
7. MAINTAIN MINIMUM 4' DEPTH FOR NEW LATERALS.
8. PIPE AND FITTINGS SHALL BE COMPATIBLE.
9. INSET-A-TEE ONLY ALLOWED ON PIPES 6"-10" WITH USE OF A MANDREL. FLAT TEES MUST BE APPROVED BY THE CITY.
10. MARKER POSTS SHALL BE TREATED WOOD. POST SHALL BE 2" X 4" X REQUIRED LENGTH FIR. POST TO EXTEND 24' MINIMUM ABOVE FINISH GRADE.
11. STAMP (IN CONCRETE) A 3" HIGH BY 2 WIDE BY 1/4" DEEP "SD" (FOR STORM DRAIN) OR "S" (FOR SANITARY) ON TOP OF THE CONCRETE CURB FOR FUTURE LOCATES.
12. PIPE ZONE AND TRENCH BACKFILL TO BE INSTALLED PER STANDARD DRAWING FV201.

CITY OF FAIRVIEW EST 1908 OREGON	SEWER SERVICE CONNECTION SCALE: NTS	DETAIL NUMBER FV219
		REVISED MAR 23, 2017

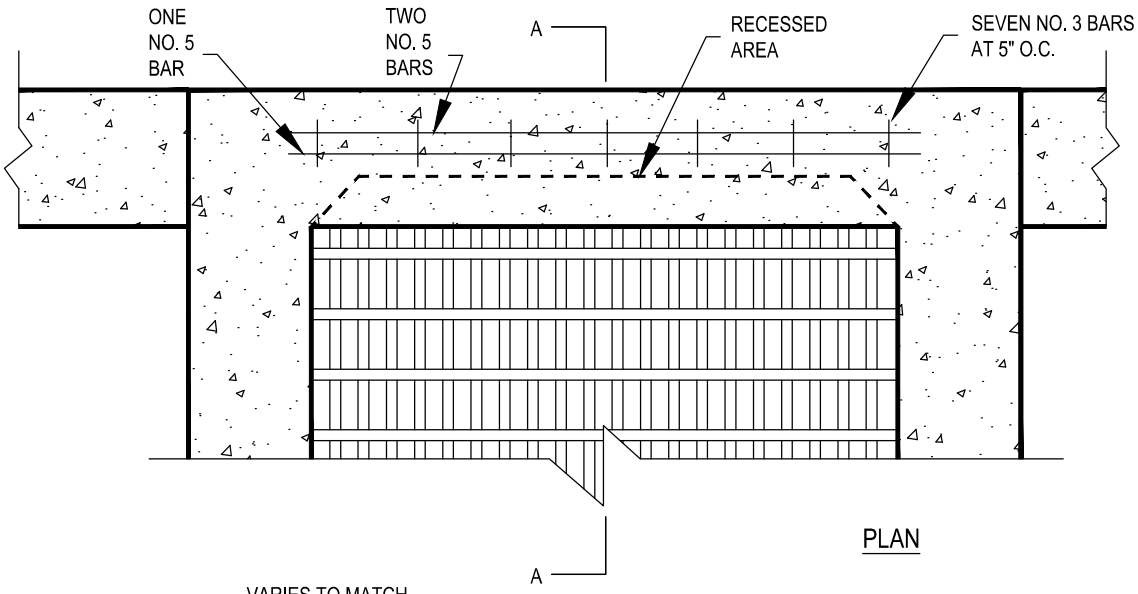

PLAN

SEE STD DRAWING FV205
FOR FRAME AND COVER.

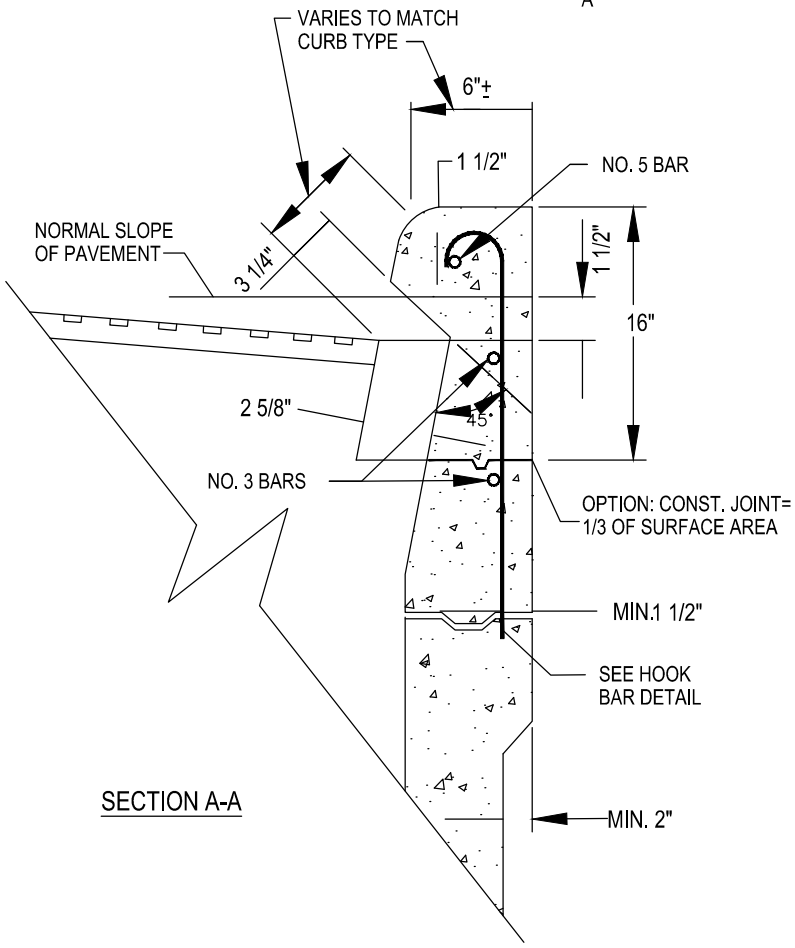

SECTION A-A

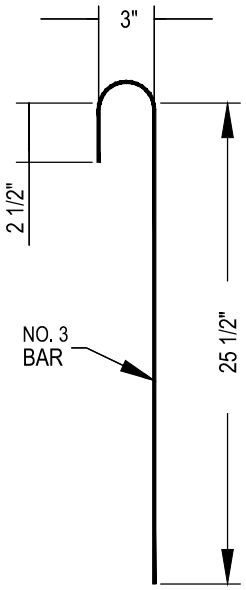

HOOK BAR
DETAIL

NOTES:

1. #3 BARS SHALL BE PLACED DURING CURBING CONSTRUCTION.
2. ALL BARS SHALL BE PLACED A MINIMUM 1-1/2" CLEAR OF NEAREST FACE.
3. ALL BAR SPLICE LENGTHS SHALL HAVE A MINIMUM DIAMETER OF 20".

CITY OF FAIRVIEW EST 1908 OREGON	CURB AND GUTTER INLET SCALE: NTS	DETAIL NUMBER FV220
		REVISED MAR 23, 2017

CONCRETE THRUST BLOCK SCHEDULE

(HORIZONTAL) BEARING AREA OF THRUST BLOCKS IN SQUARE FEET								
FITTING SIZE	TEE, WYE, DEAD END	STRADDLE BLOCK	90° BEND PLUGGED CROSS	TEE PLUGGED ON RUN		45° BEND	22-1/2° BEND	11-1/4° BEND
				A-1	A-2			
4	1.0	1.6	1.4	1.9	1.4	1.0	---	---
6	2.1	3.7	3.0	4.3	3.0	1.6	1.0	---
8	3.8	6.5	5.3	7.6	5.4	2.9	1.5	1.0
10	5.9	10.2	8.4	11.8	8.4	4.6	2.4	1.2
12	8.5	14.7	12.0	17.0	12.0	6.6	3.4	1.7
14	11.5	---	16.3	23.0	16.3	8.9	4.6	2.3
16	15.0	26.1	21.3	30.0	21.3	11.6	6.0	3.0
18	19.0	---	27.0	38.0	27.0	14.6	7.6	3.8
20	23.5	40.8	33.3	47.0	33.3	18.1	9.4	4.7
24	34.0	58.8	48.0	68.0	48.0	26.2	13.6	6.8

BEND

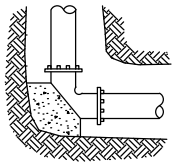

CROSS

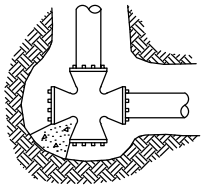

TEE

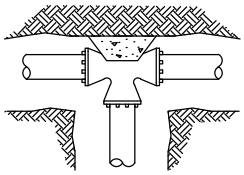

CROSS

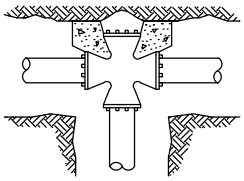

WYE

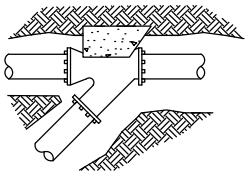

TEE

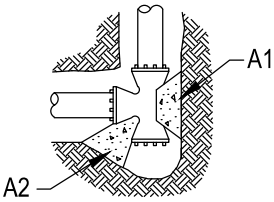

STRADDLE BLOCK

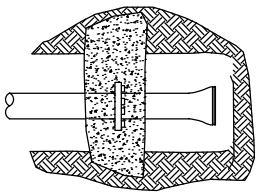

ABOVE BEARING AREAS BASED ON TEST PRESSURE OF 150 PSI AND AN ALLOWABLE SOIL BEARING STRENGTH OF 2,000 POUNDS PER SQUARE FOOT. TO COMPUTE BEARING AREAS FOR DIFFERENT TEST PRESSURES AND SOIL BEARING STRESSES, USE THE FOLLOWING EQUATION:

BEARING AREA = (TEST PRESSURE / 150) x (2,000 / SOIL BEARING STRESS) x (TABLE VALUE)

ABOVE VOLUMES BASED ON TEST PRESSURE OF 150 PSI AND CONCRETE UNIT WEIGHT OF 4,050 POUNDS PER CUBIC YARD. TO COMPUTE FOR DIFFERENT TEST PRESSURES , USE THE FOLLOWING EQUATION:

VOLUME = (TEST PRESSURE / 150) x (TABLE VALUE)

NOTES:

1. CONCRETE THRUST BLOCKING TO BE POURED AGAINST UNDISTURBED EARTH.
2. KEEP CONCRETE CLEAR OF JOINT AND ACCESSORIES. INSTALL 12 MIL TOTAL THICKNESS POLYETHYLENE SHEET AROUND FITTING. SECURE SHEET ENDS TO PREVENT INFILTRATION OF DIRT BETWEEN SHEET AND PIPE FITTING PRIOR TO POURING THRUST BLOCKING.
3. THE REQUIRED THRUST BEARING AREAS FOR SPECIAL CONNECTIONS ARE SHOWN.
4. IF NOT SHOWN ON PLANS, REQUIRED BEARING AREAS AT FITTING SHALL BE AS INDICATED ABOVE, ADJUST IF NECESSARY, TO CONFORM TO THE TEST PRESSURE(S) AND ALLOWABLE SOIL BEARING STRESS(ES) STATED IN THE *SPECIFICATIONS*.
5. BEARING AREAS ON THIS DETAIL ARE MINIMUMS AND SPECIAL BLOCKING DETAILS SHOWN ON PLANS TAKE PRECEDENCE OVER BEARING AREAS AND BLOCKING DETAILS SHOWN ON THIS *STANDARD DRAWING*.

CITY OF FAIRVIEW EST 1908 OREGON	HORIZONTAL THRUST BLOCKING SCALE: NTS	DETAIL NUMBER FV450A
		REVISED MAR 23, 2017

(VERTICAL) VOLUME OF THRUST BLOCK IN CUBIC YARDS			
90° BEND	45° BEND	22-1/2° BEND	11-1/4° BEND
--	--	--	--
1.3	--	--	--
2.3	1.1	--	--
3.7	1.8	--	--
5.5	2.8	1.2	--
7.6	3.9	1.7	--
9.9	5.1	2.3	0.9
--	--	--	--
--	--	--	--
--	--	--	--

BEND

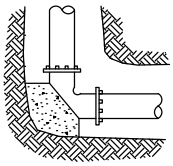

VERTICAL BEND

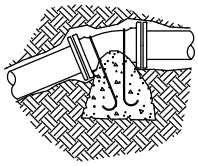

RODS FOR VERTICAL BENDS		
FITTING SIZE	ROD SIZE	EMBEDMENT
12" AND LESS	#6	30"
14"-16"	#8	36"

ABOVE BEARING AREAS BASED ON TEST PRESSURE OF 150 PSI AND AN ALLOWABLE SOIL BEARING STRENGTH OF 2,000 POUNDS PER SQUARE FOOT. TO COMPUTE BEARING AREAS FOR DIFFERENT TEST PRESSURES AND SOIL BEARING STRESSES, USE THE FOLLOWING EQUATION:
BEARING AREA = (TEST PRESSURE / 150) x (2,000 / SOIL BEARING STRESS) x (TABLE VALUE)

ABOVE VOLUMES BASED ON TEST PRESSURE OF 150 PSI AND CONCRETE UNIT WEIGHT OF 4,050 POUNDS PER CUBIC YARD. TO COMPUTE FOR DIFFERENT TEST PRESSURES , USE THE FOLLOWING EQUATION:
VOLUME = (TEST PRESSURE / 150) x (TABLE VALUE)

NOTES:
1. CONCRETE THRUST BLOCKING TO BE POURED AGAINST UNDISTURBED EARTH.
2. KEEP CONCRETE CLEAR OF JOINT AND ACCESSORIES. INSTALL 12 MIL TOTAL THICKNESS POLYETHYLENE SHEET AROUND FITTING. SECURE SHEET ENDS TO PREVENT INFILTRATION OF DIRT BETWEEN SHEET AND PIPE FITTING PRIOR TO POURING THRUST BLOCKING.
3. THE REQUIRED THRUST BEARING AREAS FOR SPECIAL CONNECTIONS ARE SHOWN.
4. IF NOT SHOWN ON PLANS, REQUIRED BEARING AREAS AT FITTING SHALL BE AS INDICATED ABOVE, ADJUST IF NECESSARY, TO CONFORM TO THE TEST PRESSURE(S) AND ALLOWABLE SOIL BEARING STRESS(ES) STATED IN THE *SPECIFICATIONS*.
5. BEARING AREAS AND SPECIAL BLOCKING DETAILS SHOWN ON PLANS TAKE PRECEDENCE OVER BEARING AREAS AND BLOCKING DETAILS SHOWN ON THIS *STANDARD DRAWING*.
6. VERTICAL CHANGES IN DIRECTION REQUIRE SPECIFIC DESIGNS FOR THRUST BLOCKS.
7. TIE RODS SHALL BE DEFORMED GALVANIZED COLD ROLLED STEEL WITH 4,000 PSI TENSILE STRENGTH.
8. VERTICAL BENDS SIZED ACCORDING TO HORIZONTAL THRUST BLOCK SCHEDULE.

CITY OF FAIRVIEW EST 1908 OREGON

VERTICAL THRUST BLOCKING
SCALE: NTS

DETAIL NUMBER
FV450B

REVISED
MAR 23, 2017

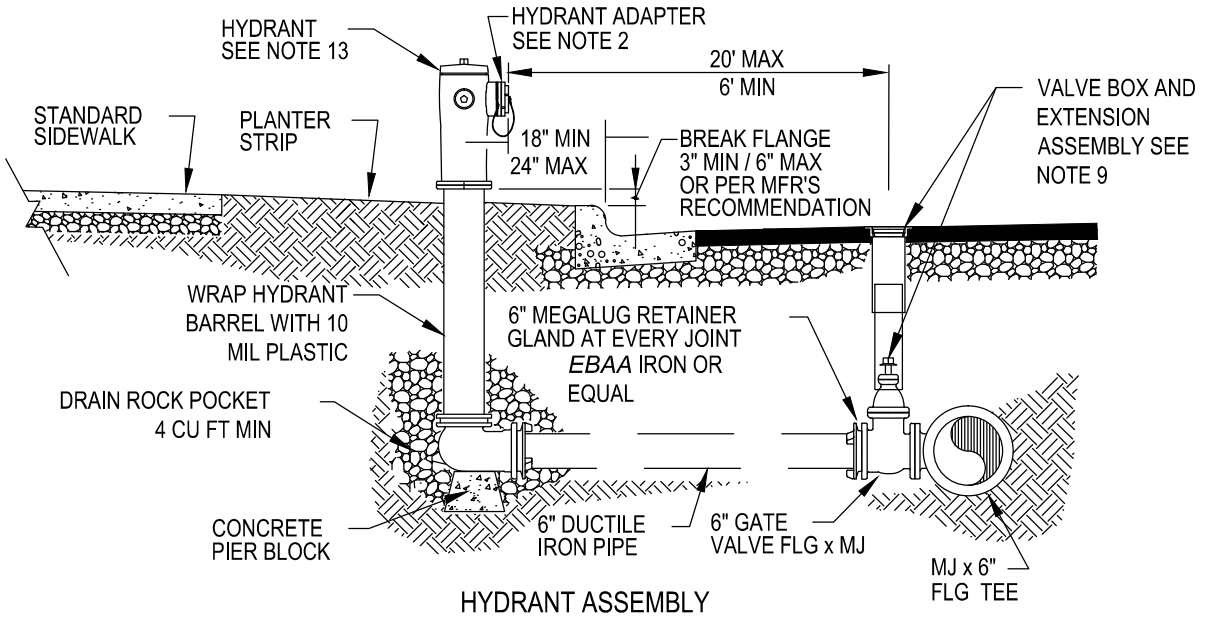

HYDRANT ASSEMBLY

AT STANDARD SIDEWALK WITH PLANTER STRIP

NOTES:

1. HYDRANTS ARE TO HAVE TWO 2½ INCH AND ONE 4½ INCH PORTS.
2. INSTALL A *STORZ* HPHA50 - 45NH PERMANENT HYDRANT ADAPTER ON THE 4½ INCH PORT.
3. THE MINIMUM MAIN - TO - HYDRANT PIPE SIZE IS 6 INCHES.
4. HYDRANTS TO BE: *MUELLER* (SUPER CENTURION 200), *WATEROUS* (PACER WB67-250), *CLOW* (MEDALLION F-2545), OR *KENNEDY* (GUARDIAN K-81D) WITH THE FOLLOWING SPECIFICATIONS:
   - 4.1. 5¼ INCH MAIN VALVE (BARREL)
   - 4.2. OIL RESERVOIR
   - 4.3. BRONZE ACTUATING NUT
   - 4.4. BRONZE SEAT RING
   - 4.5. WEATHER SHIELD CAP
   - 4.6. SAFETY SLEEVE COUPLING
   - 4.7. THREADED NOZZLES WITH "O" RINGS
   - 4.8. NATIONAL STANDARD THREADS
5. PUBLIC HYDRANTS ARE TO BE PAINTED YELLOW AND PRIVATE HYDRANTS ARE TO BE PAINTED RED.
6. SAFETY CHAINS ARE TO BE REMOVED.
7. HYDRANTS ARE TO BE INSTALLED PLUMB.
8. PROTECTIVE POST IS TO BE PROVIDED AND INSTALLED, PER *UFC STANDARDS*, IF HYDRANT IS SUBJECT TO VEHICULAR DAMAGE.
9. VALVE BOX ASSEMBLY AND OR EXTENSION ASSEMBLY IS TO BE IN ACCORDANCE *FAIRVIEW STANDARD DRAWING* FV452 OR AS APPROVED BY THE CITY.
10. NO OBSTRUCTIONS ARE ALLOWED WITHIN 3 FEET OF HYDRANT.
11. SEE *FAIRVIEW STANDARD DRAWING* FV521 FOR SIDEWALK STANDARDS.
12. PIPE BENDS ARE NOT ALLOWED WITHOUT PERMISSION OF THE CITY ENGINEER.
13. HYDRANTS MAY BE LOCATED AT VARYING DISTANCES FROM CURB OR IN SIDEWALK ONLY WITH PRIOR APPROVAL OF THE CITY ENGINEER. IF HYDRANT IS LOCATED IN SIDEWALK, SIDEWALK'S CLEAR WIDTH SHALL MEET *ADA* CLEARANCE WIDTH REQUIREMENTS.

CITY OF FAIRVIEW EST 1908 OREGON	FIRE HYDRANT ASSEMBLY SCALE: NTS	DETAIL NUMBER FV451
		REVISED MAR 23, 2017

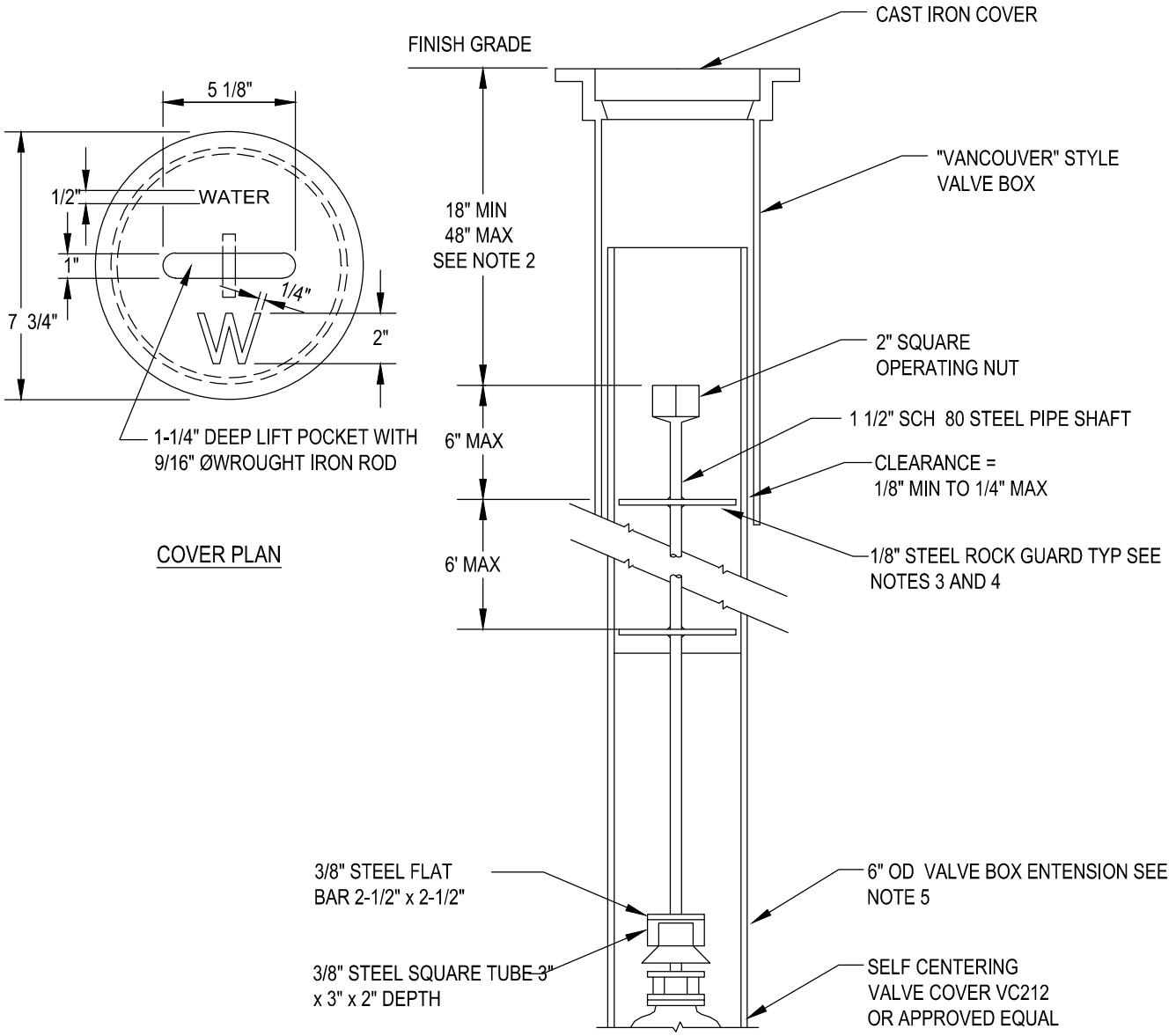

NOTES:

1. VALVE BOX NOT TO REST ON OPERATING ASSEMBLY.
2. EXTEND THE 2 INCH SQUARE OPERATING NUT WHEN THE VALVE NUT IS 48 INCHES OR DEEPER BELOW THE FINISHED GRADE.
3. THE ROCK GUARD SHALL BE A 1/8 INCH STEEL PLATE WELDED TO THE PIPE SHAFT WITH A DIAMETER THAT IS 3/8 INCH LESS THAN THE INSIDE DIAMETER OF THE VALVE BOX.
4. WHERE DEPTH IS OVER 6 FEET, A SECOND PLATE SHALL BE INSTALLED EQUIDISTANT BETWEEN THE FIRST ROCK GUARD AND THE VALVE NUT. SECOND PLATE SHALL BE CONSTRUCTED SAME AS ROCK GUARD.
5. EXTEND VALVE BOX BY USING ONE PIECE WITH NO LONGITUDINAL CUTS, TO THE LENGTH REQUIRED, OF 6 INCH OD, 12 GAUGE STEEL PIPE OR *ASTM* D3034-SDR 35 PVC PIPE.

CITY OF FAIRVIEW EST 1908 OREGON	VALVE BOX AND EXTENSION ASSEMBLY SCALE: NTS	DETAIL NUMBER FV452
		REVISED MAR 03, 2018

BLOW-OFF SIZES REQUIRED	
MAIN SIZE	BLOW-OFF SIZE
TEMPORARY	2"
4" TO 6"	2"
8" TO 12"	4"
14" TO 18"	6"

NOTES:

1. BACKFILL WITH SELECT CRUSHED AGGREGATE A MINIMUM OF 6" ON ALL SIDES.
2. ON TEMPORARY BLOW-OFFS ONLY, AN MJ CAP TAPPED 4" OR 6" MAY BE SUBSTITUTED FOR REDUCER.
3. TEMPORARY BLOW-OFF IS ONE REMOVED AT THE END OF PROJECT CONSTRUCTION. A PERMANENT BLOW-OFF REMAINS ON THE PROJECT AFTER ACCEPTANCE.
4. PLACE BLOW-OFF STANDPIPE 3 FT. INSIDE ROW. LINE AT END OF STREET (2 FT. FROM BARRICADE) OR 3' FROM GUTTER IN A CUL-DE-SAC.
5. USE CITY STANDARD VALVE BOX, LID, AND 6" PVC EXTENSION FOR BLOW-OFF VALVE. USE "PORTLAND" STYLE VALVE BOX, LID, AND 8" PVC EXTENSION FOR BLOW-OFF STAND PIPE. SEE STANDARD DRAWING FV452.
6. CITY MAY REQUIRE A STRADDLE BLOCK DEPENDING ON PIPE SIZED AND SOIL CONDITION.

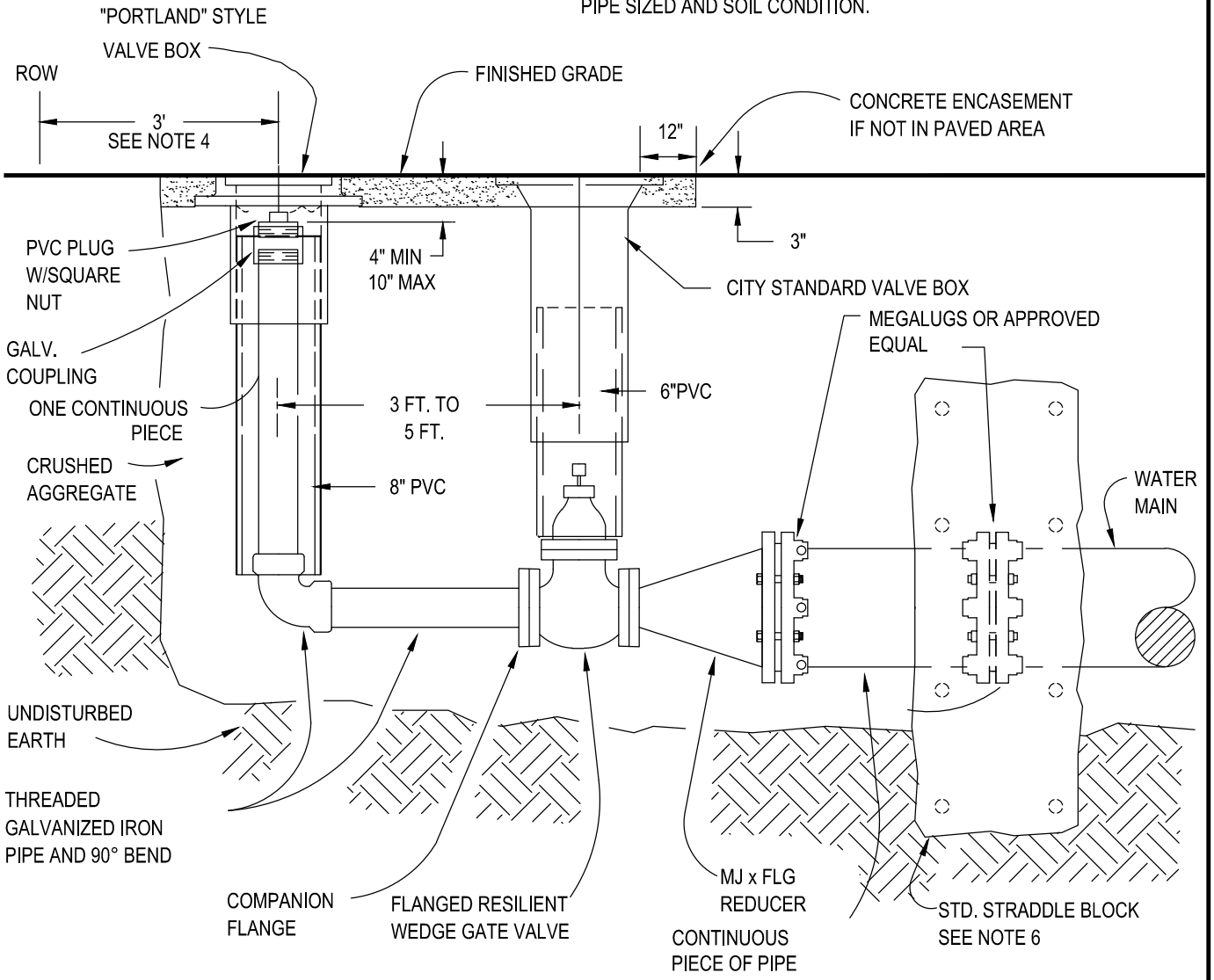

CITY OF FAIRVIEW EST 1908 OREGON	PERMANENT OR TEMPORARY 2" & 4" BLOW OFF SCALE: NTS	DETAIL NUMBER FV453
		REVISED MAR 23, 2017

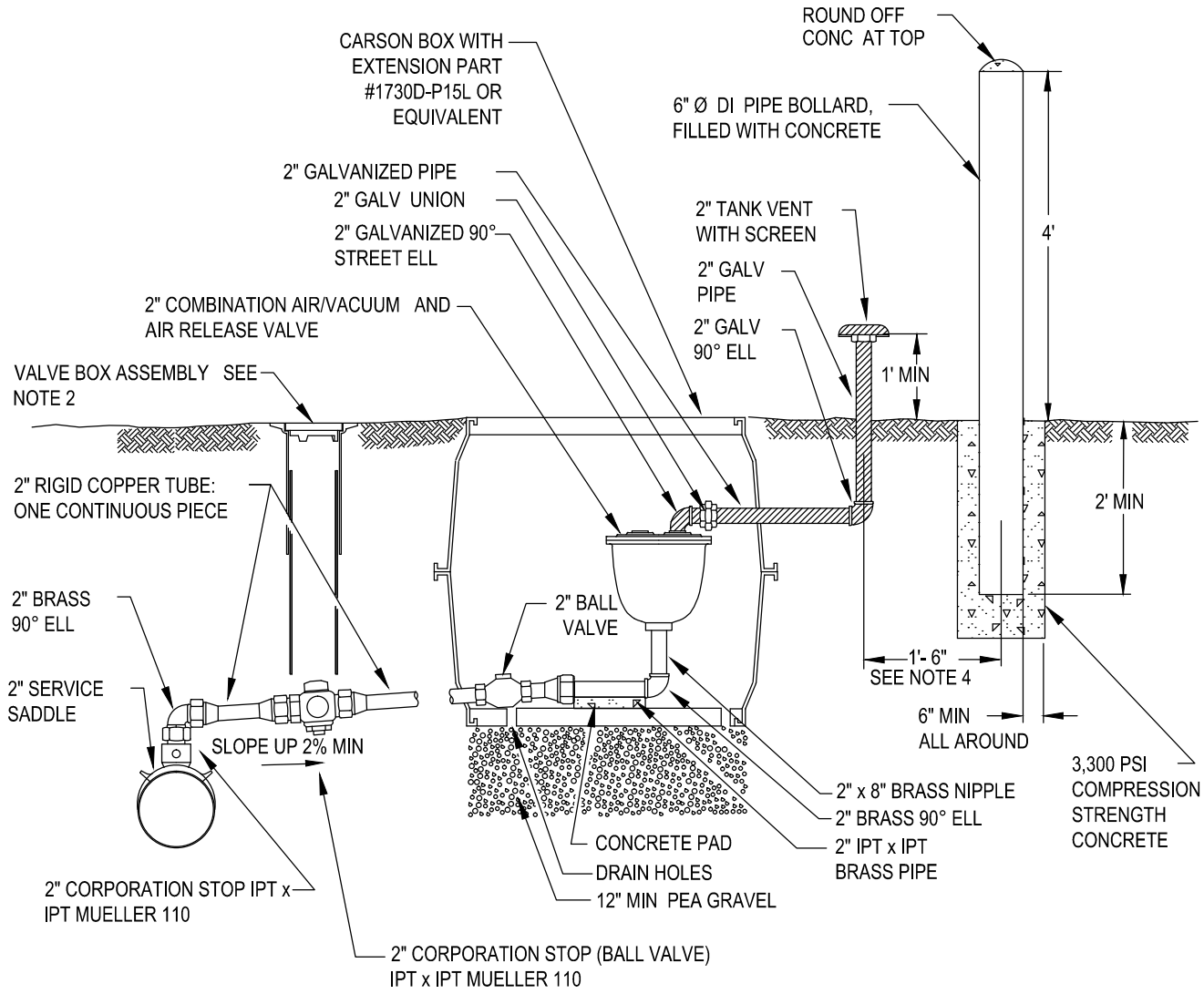

NOTES:

1. VALVE SIZE AND TYPE TO BE SPECIFIED BY THE DESIGN ENGINEER AND APPROVED BY THE CITY.
2. VALVE BOX ASSEMBLY IS TO BE IN ACCORDANCE WITH *FAIRVIEW STANDARD DRAWING* FV452 OR AS APPROVED BY THE CITY.
3. PAINT BOLLARD YELLOW.
4. TO AVOID CONFLICTS, EXACT LOCATION OF SHUTOFF VALVE AND BOLLARD TO BE DETERMINED IN THE FIELD BY THE CITY.
5. GALVANIZED PIPE IS PERMITTED ONLY ON THE OUTLET SIDE OF THE COMBINATION VALVE.
6. INSTALLATION LOCATED AT HIGH POINT OF MAIN.
7. ALL PIPE AND STRUCTURE ZONES SHALL BE COMPACTED TO 95% OF MAX. DENSITY AS DETERMINED BY AASHTO T-180 OR AS SPECIFIED IN THE CONTRACT DOCUMENTS.
8. DETAIL NOT FOR SHALLOW INSTALLATIONS. INSTALLATIONS FOR WATERLINES LESS THAN 36-INCH OF COVER SHALL BE INDIVIDUALLY DESIGNED BY THE ENGINEER OF RECORD.
9. GROUT ALL AREAS WHERE COPPER PASSES THROUGH STRUCTURE.
10. ALL BRASS SHALL BE NON-LEADED MATERIAL

CITY OF FAIRVIEW EST 1908 OREGON	AIR RELEASE AND VALVE ASSEMBLY 2" AND SMALLER SCALE: NTS	DETAIL NUMBER FV455
		REVISED MAR 23, 2017

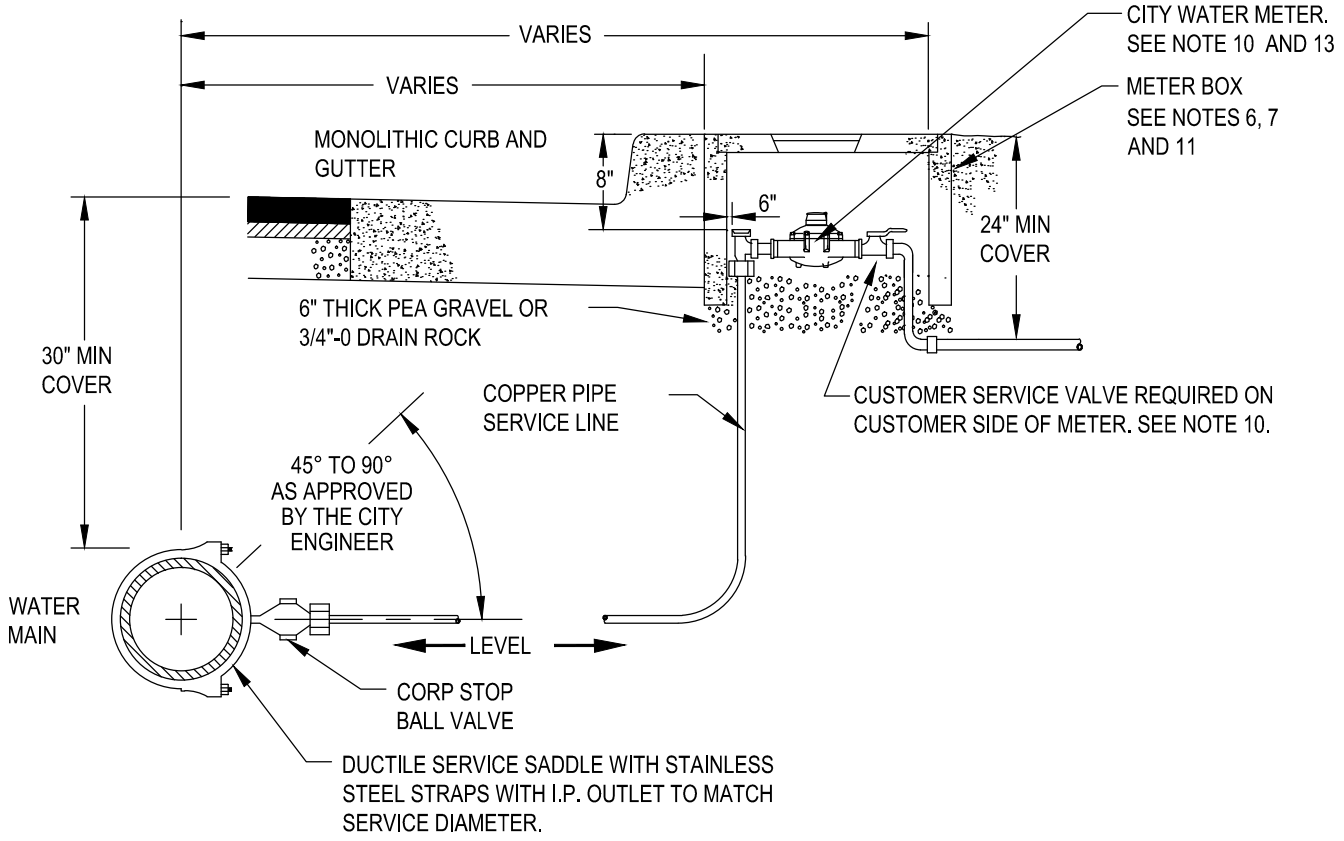

NOTES:

1. WATER SERVICE TO BE INSTALLED BY DEVELOPER.
2. WATER METER TO BE PROVIDED BY CITY AFTER PAYMENT OF ALL APPLICABLE FEES.
3. WHEREVER POSSIBLE, SERVICE LINE TO EXTEND PERPENDICULAR FROM THE WATER MAIN TO THE METER STOP.
4. CORPORATION AND CURB STOPS TO BE *MUELLER* 300 BALL VALVES, 300 PSI RATED, WITH *MUELLER* 110 COMPRESSION JOINTS AND PADLOCK WINGS, *FORD METER BOX CO. BALLCORP* 300 PSI RATED BALL VALVE WITH "QUICK JOINT" CONNECTIONS AND PADLOCK WINGS, OR IDENTICAL EQUAL. CORPORATION STOP TO BE INSTALLED WITH KEY SIDEWAYS IN OPEN POSITION.
5. A 1-INCH BYPASS LINE WITH LOCKING CURB STOP MAY BE REQUIRED FOR CONTINUOUS SERVICE INSTALLATIONS.
6. TOP OF METER BOX TO BE SET FLUSH WITH SIDEWALK OR TOP OF CURB.
7. ALL METER BOXES LOCATED IN DRIVEWAYS AND SIDEWALKS SHALL HAVE TRAFFIC COVERS.
8. METER TO BE CENTERED AND SET PLUMB INSIDE METER BOX.
9. ALL PIPE AND STRUCTURE ZONES SHALL BE BACKFILLED USING 3/4"-MINUS CRUSHED AGGREGATE AND COMPACTED TO 95% MAX. DENSITY AS DETERMINED BY AASTHO T-180.
10. WATER METER AND CUSTOMER VALVE INSTALLATION SHALL BE COORDINATED WITH THE CITY.
11. METER BOX TO BE ARMORCAST OR APPROVED EQUAL. SEE METERBOX A OR B IN THE DESIGN STANDARDS AS APPLICABLE .
12. THIS DETAIL MAY BE USED ON METERED IRRIGATION SYSTEMS ON COMMERCIAL SITES.
13. WATER METER REQUIRED IS A NEPTUNE T-10 W/ R900I REGISTER AND A 6 FOOT ANTENNA INSTALLED IN METER LID.

CITY OF FAIRVIEW EST 1908 OREGON	3/4" TO 1 1/2" WATER SERVICE SCALE: NTS	DETAIL NUMBER FV456
		REVISED MAR 03, 2018

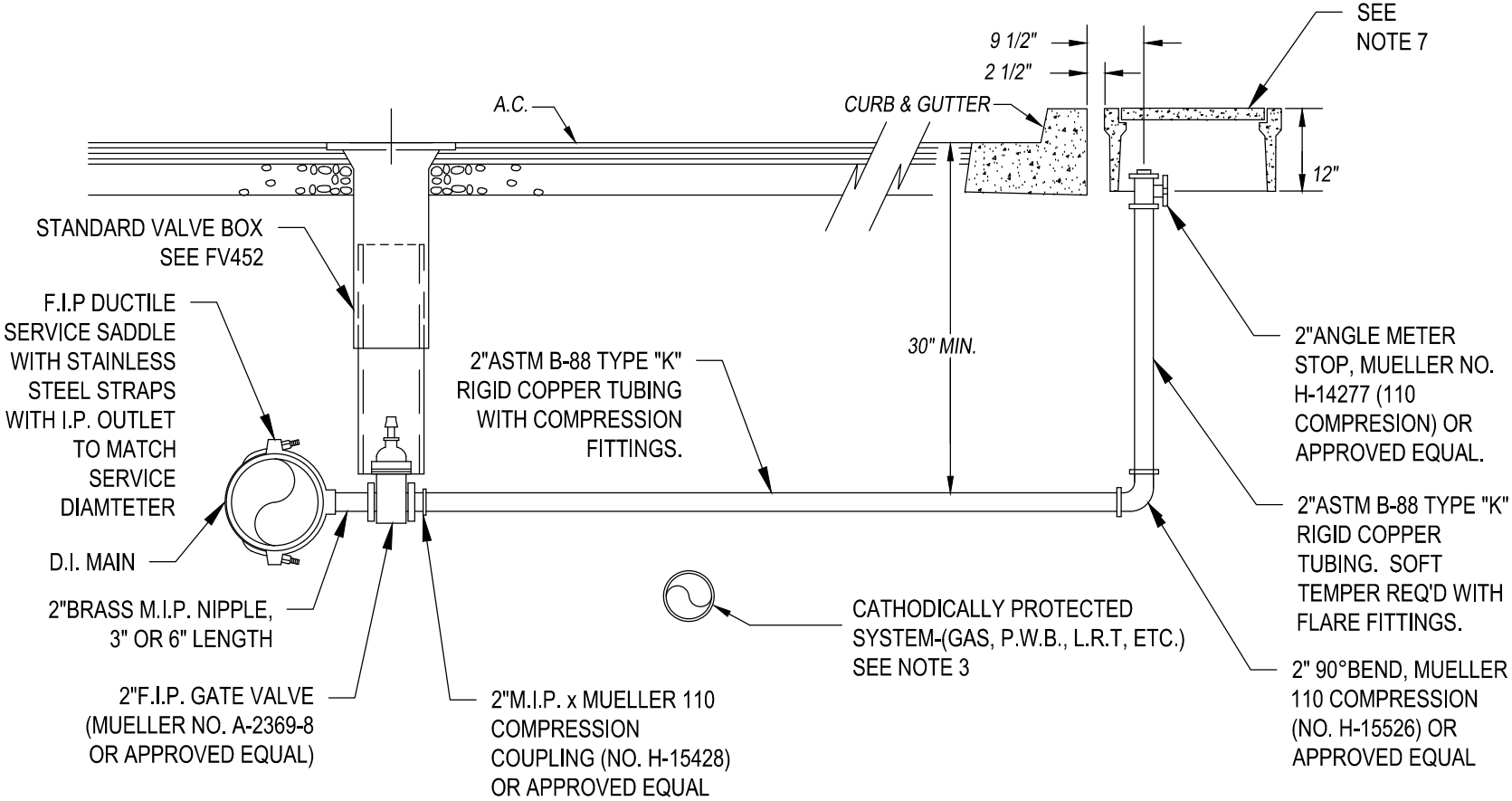

NOTES:

1. SUBSTITUTES FOR ANY MATERIALS SHOWN SHALL BE APPROVED BY THE CITY.
2. ALL PIPE AND STRUCTURE ZONES SHALL BE BACKFILLED USING 3/4" MINUS CRUSHED AGG. AND COMPACTED TO 95% MAX. DENSITY AS DETERMINED BY AASHTO T-180.
3. WHEN AN ACTIVE CATHODIC PROTECTION SYSTEM IS ENCOUNTERED DESIGN SHALL BE APPROVED BY CORRESPONDING COMPANY.
4. METER BOX SHALL BE CENTERED OVER THE COMPLETED METER AND FITTING ASSEMBLY.
5. CUSTOMER SHALL INSTALL AN APPROVED BACKFLOW PREVENTION ASSEMBLY AT RIGHT-OF-WAY.
6. ANGLE METER STOP SHALL BE PERPENDICULAR TO CURB LINE.
7. METER BOX SHALL BE ARMORCAST OR APPROVED EQUAL. SEE METERBOX B, C, OR D IN THE DESIGN STANDARDS AS APPLICABLE .

CITY OF FAIRVIEW OREGON EST 1908

STANDARD 2" WATER SERVICE

SCALE: NTS

DETAIL NUMBER
FV457

REVISED
MAR 23, 2017

NOTE:

1. BACKSIDE OF METER BOX SHALL BE ON PROPERTY LINE.
4. BACKFLOW DEVICES TO BE INSTALLED ON SERVICE LINE AS REQUIRED.
5. STANDARD BYPASS SHALL BE 2-INCH WITH LOCKABLE BALL VALVE.
6. ALL VAULTS SHALL BE PROVIDED WITH ADEQUATE DRAINAGE AND MUST BE WATER-TIGHT.
7. SEE METERBOX B AND D IN THE DESIGN STANDARDS AS APPLICABLE.
8. METER REGISTERS MUST HAVE 20' ANTENNAS INSTALL IN VAULT LID.
9. ALL FITTINGS INSIDE VAULT OR BOX MUST BE BRASS AND OR COPPER.
10. METER REQUIRED: NEPTUNE TRU-FLO COMPOUND W/ R900I REGISTERS.
11. VAULT SHALL HAVE SUMP PUMP W/ DISCHARGE TO CURB OUTLET.

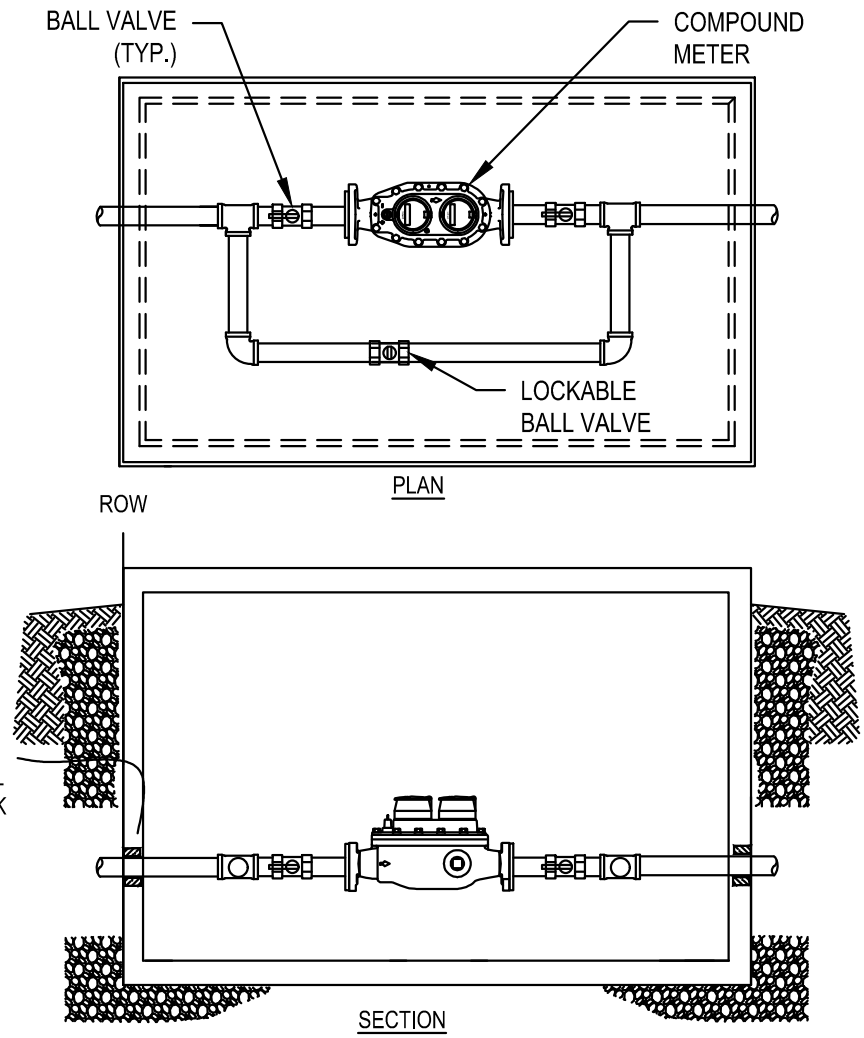

COMPOUND METER 2" SERVICE

SCALE: NTS

DETAIL NUMBER
FV458

REVISED
MAR 03, 2018

NOTES:

1. PVC PIPE OR FITTINGS SHALL NOT BE ALLOWED FOR SERVICE CONNECTIONS.
2. BACKSIDE OF VAULT SHALL BE ON PROPERTY LINE.
3. BACKFLOW DEVICES TO BE INSTALLED ON SERVICE LINE AS REQUIRED.
4. BYPASS SHALL BE "EQUAL" TO METER SIZE WITH LOCKABLE TYPE VALVE AND CONSTRUCTED WITH DUCTILE IRON, COPPER, AND/OR BRASS AS APPLICABLE.
5. VAULT DEPTH SHALL BE SUCH THAT THERE IS A MINIMUM CLEARANCE TO THE VAULT LID OF 6" WHEN VALVES ARE FULLY OPEN.
6. ALL VAULTS SHALL BE PROVIDED WITH SUMP PUMP WITH DISCHARGE TO CURB OUTLET.
7. METER REGISTERS MUST HAVE ANTENNAS WITH 20' CABLE INSTALLED IN VAULT LID.
8. METER WILL BE NEPTUNE TRU-FLO COMPOUND W/ R900I REGISTERS.

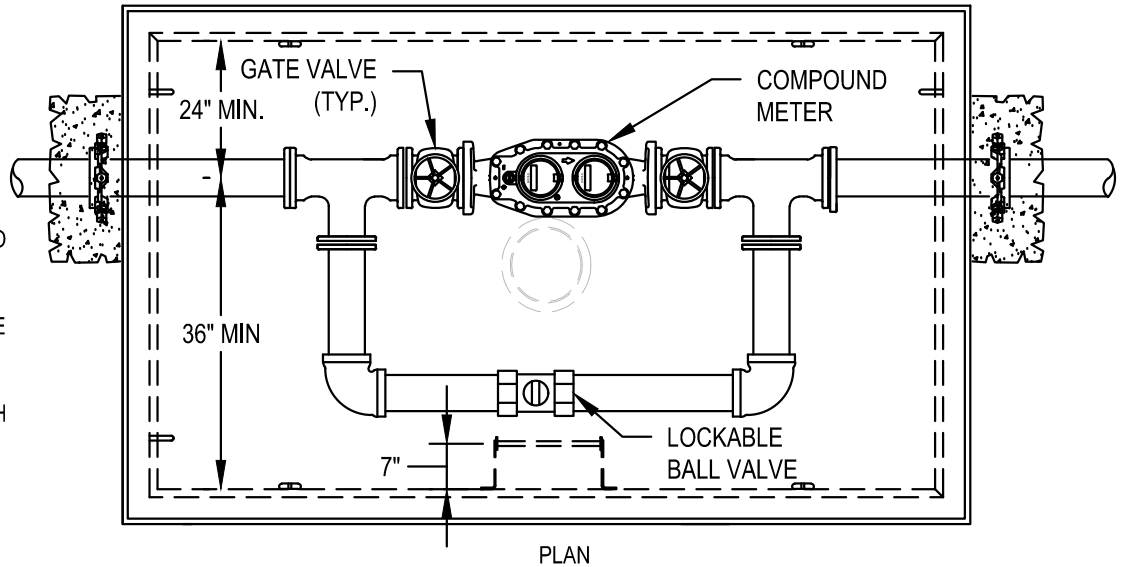

PLAN

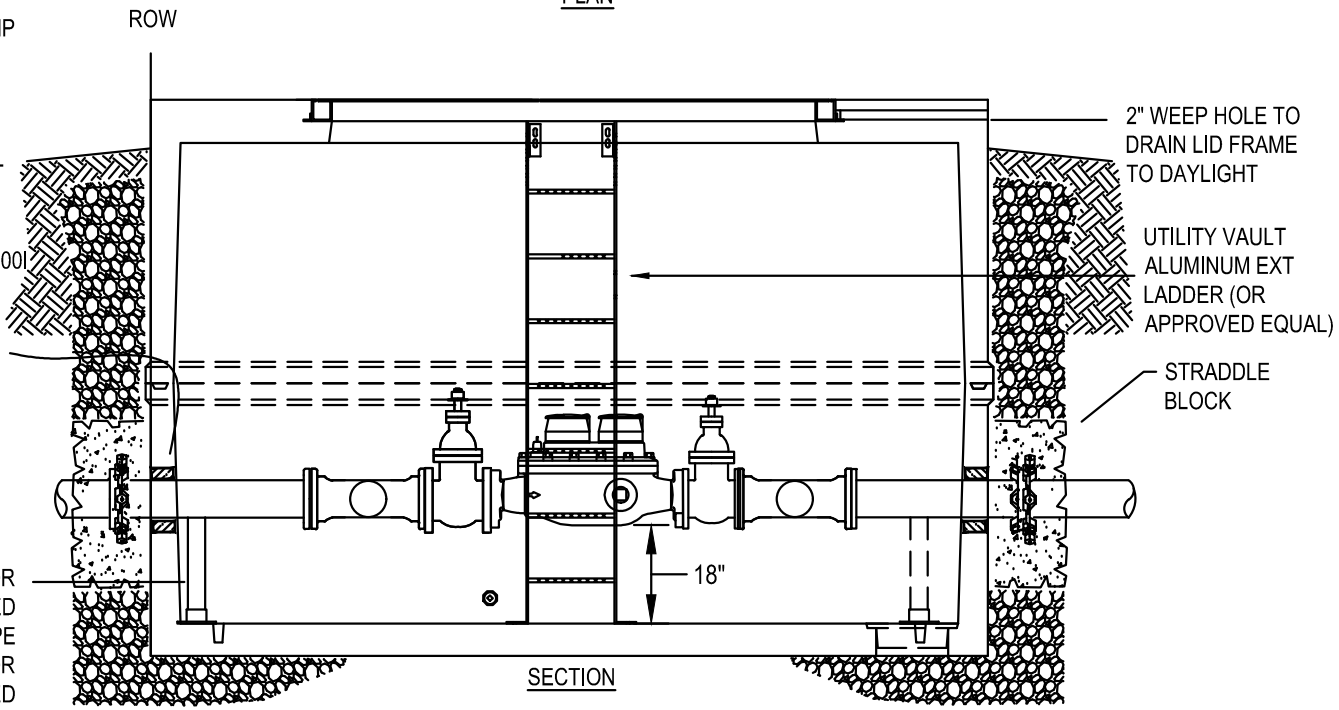

SECTION

COMPOUND METER LARGER THAN 2" SERVICE

SCALE: NTS

DETAIL NUMBER
FV459

REVISED
JUN 02, 2018

NOTES:

1. PVC PIPE OR FITTINGS SHALL NOT BE ALLOWED FOR SERVICE CONNECTIONS LARGER THAN 2-INCH.
2. BACKSIDE OF VAULT SHALL BE ON PROPERTY LINE.
3. BACKFLOW DEVICES TO BE INSTALLED ON SERVICE LINE AS REQUIRED.
4. BYPASS SHALL BE SAME SIZE AS METER AND CAN BE LOCATED INSIDE OR OUTSIDE THE VAULT.
5. VAULT DEPTH SHALL BE SUCH THAT THERE IS A MINIMUM CLEARANCE TO THE VAULT LID OF 6" WHEN VALVES ARE FULLY OPEN.
6. ALL VAULTS SHALL BE PROVIDED WITH SUMP PUMP WITH DISCHARGE TO CURB OUTLET.
7. METER REQUIRED: NEPTUNE PROTECTUS W/ R900I REGISTERS AND 20 FOOT ANTENNAS INSTALLED IN VAULT LIDS.

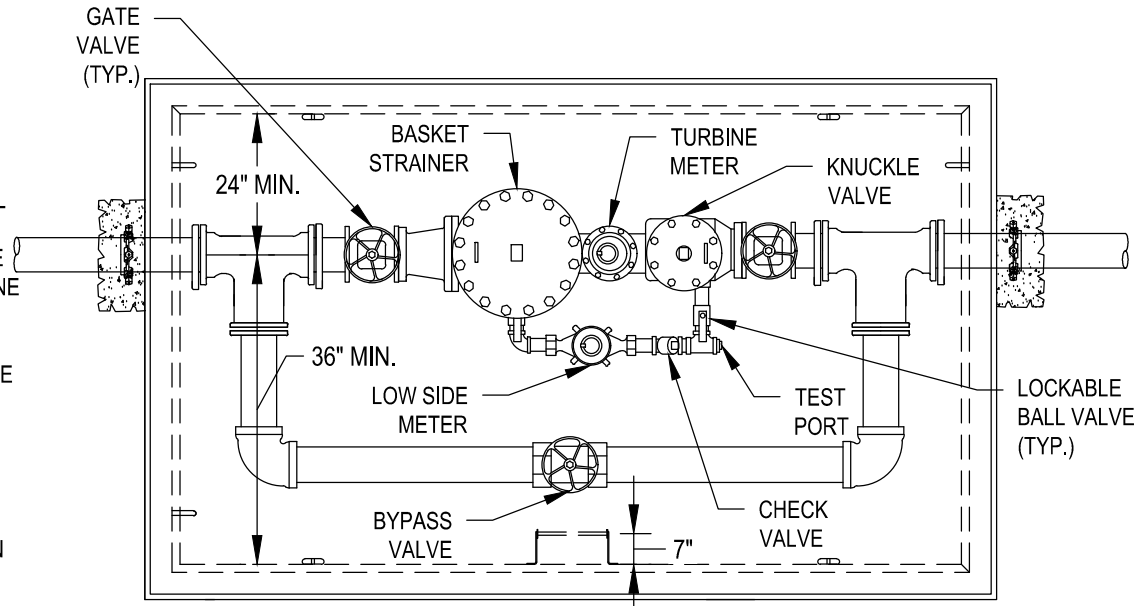

PLAN

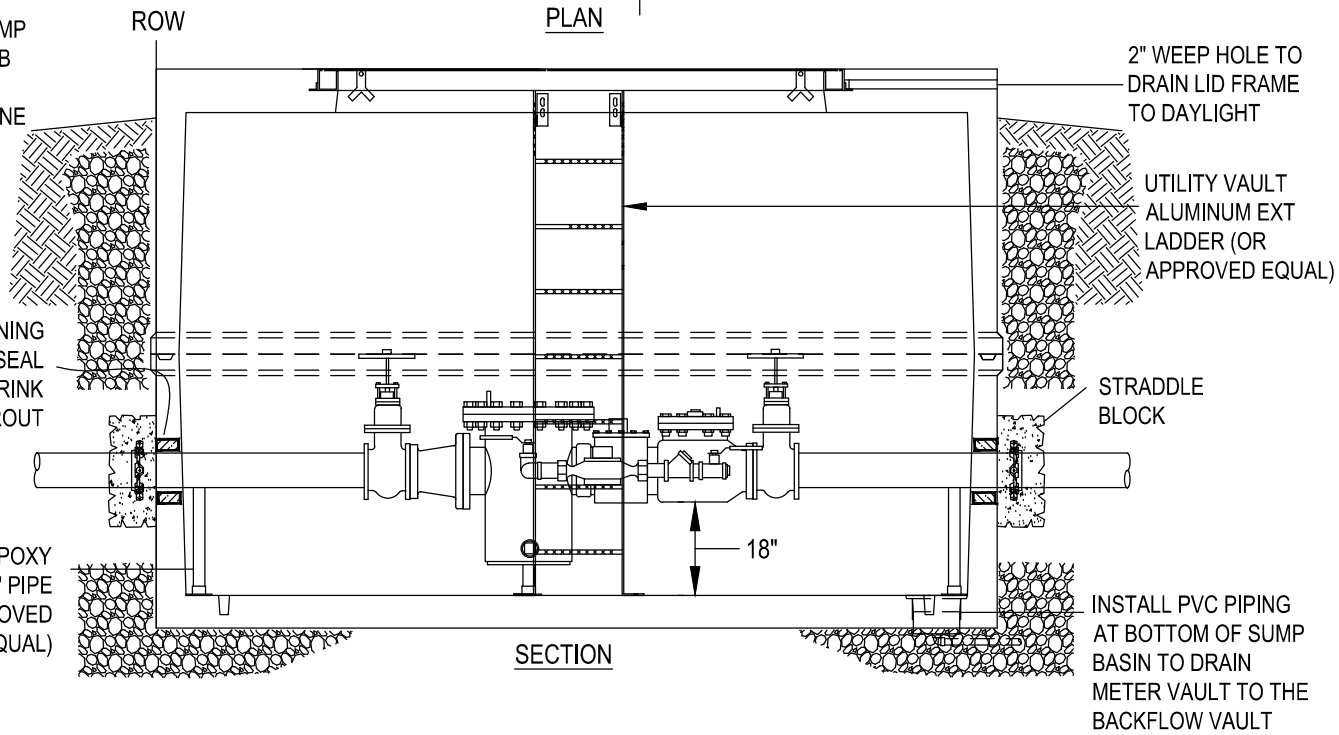

SECTION

COMBINATION METER

SCALE: NTS

DETAIL NUMBER
FV460

REVISED
JUN 02, 2018

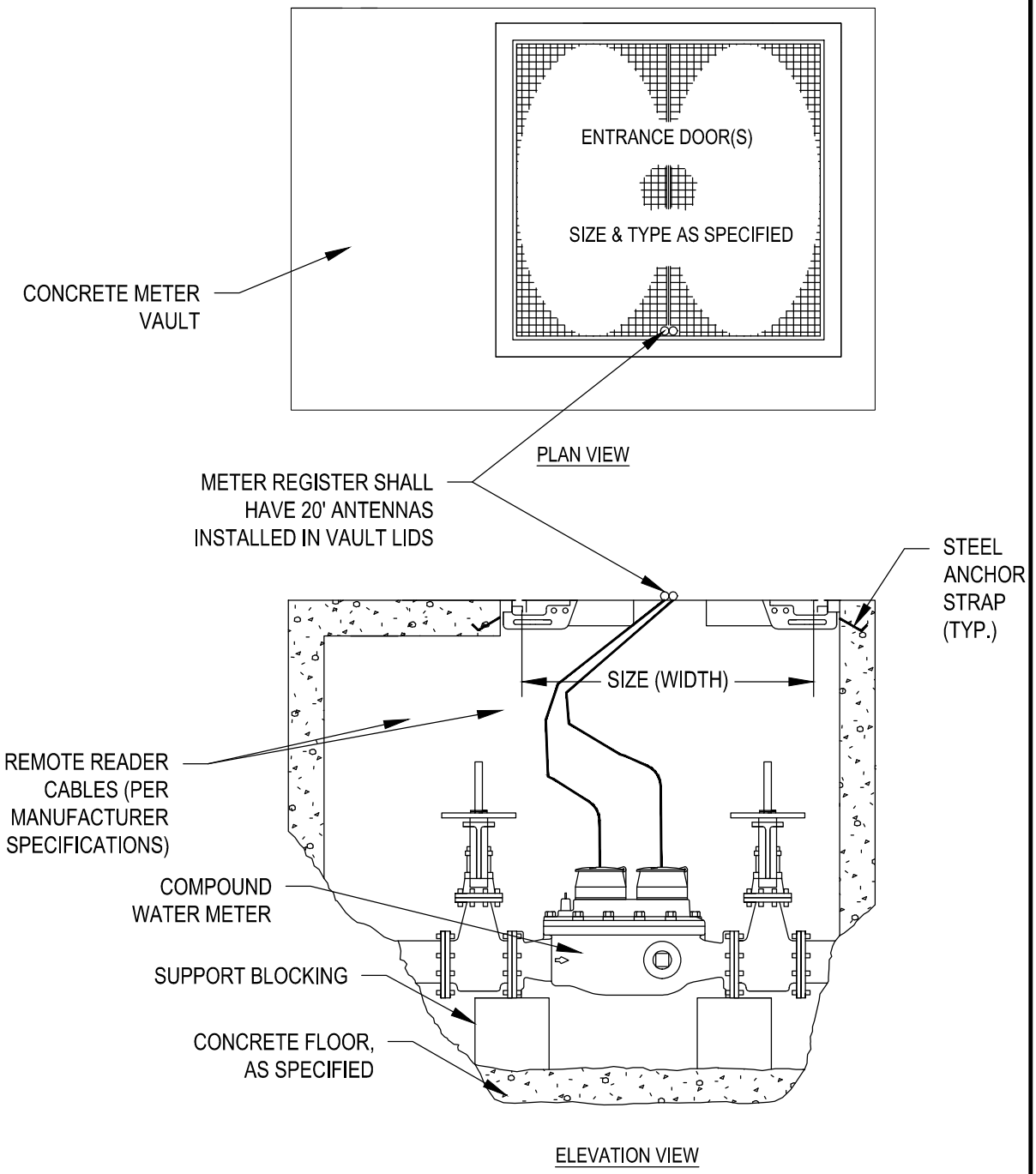

NOTES:

1. VAULT SHALL BE CONSTRUCTED PER THE "COMPOUND METER SETTINGS WITH IRRIGATION" DRAWING.
2. PRECAST UTILITY VAULTS AND STANDARD PREMANUFACTURED DOORS MAY BE USED, AS SPECIFIED.
3. DOOR(S) SHALL BE SIZED TO ACCOMMODATE METER INSTALLATION AND REMOVAL.
4. ALL VAULTS SHALL BE PROVIDED WITH SUMP PUMP WITH DISCHARGE TO CURB OUTLET.

CITY OF FAIRVIEW EST 1908 OREGON	REMOTE READER SCALE: NTS	DETAIL NUMBER FV461
		REVISED MAR 03, 2018

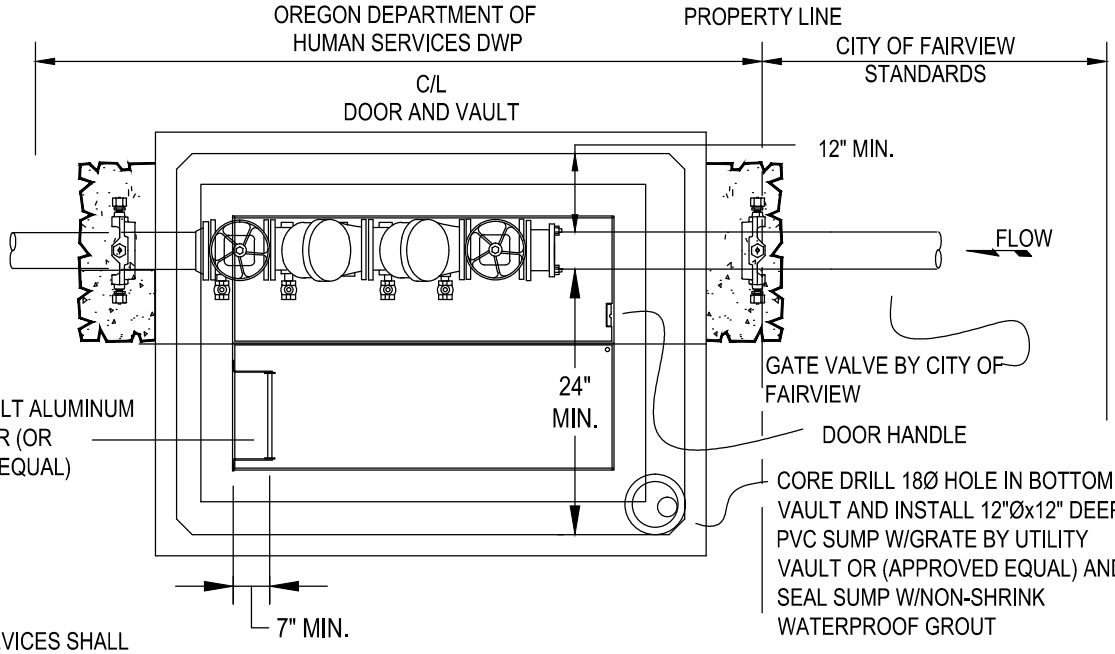

DOUBLE CHECK VALVE ASSEMBLY PLAN

NO OTHER DEVICES SHALL BE CONNECTED TO THE DCVA OR DCDA.
LOCAL FIRE DEPT. AND PLUMPBING CODE REQUIREMENTS APPLY TO ALL WATER FACILITIES PAST THE BACKFLOW VAULT

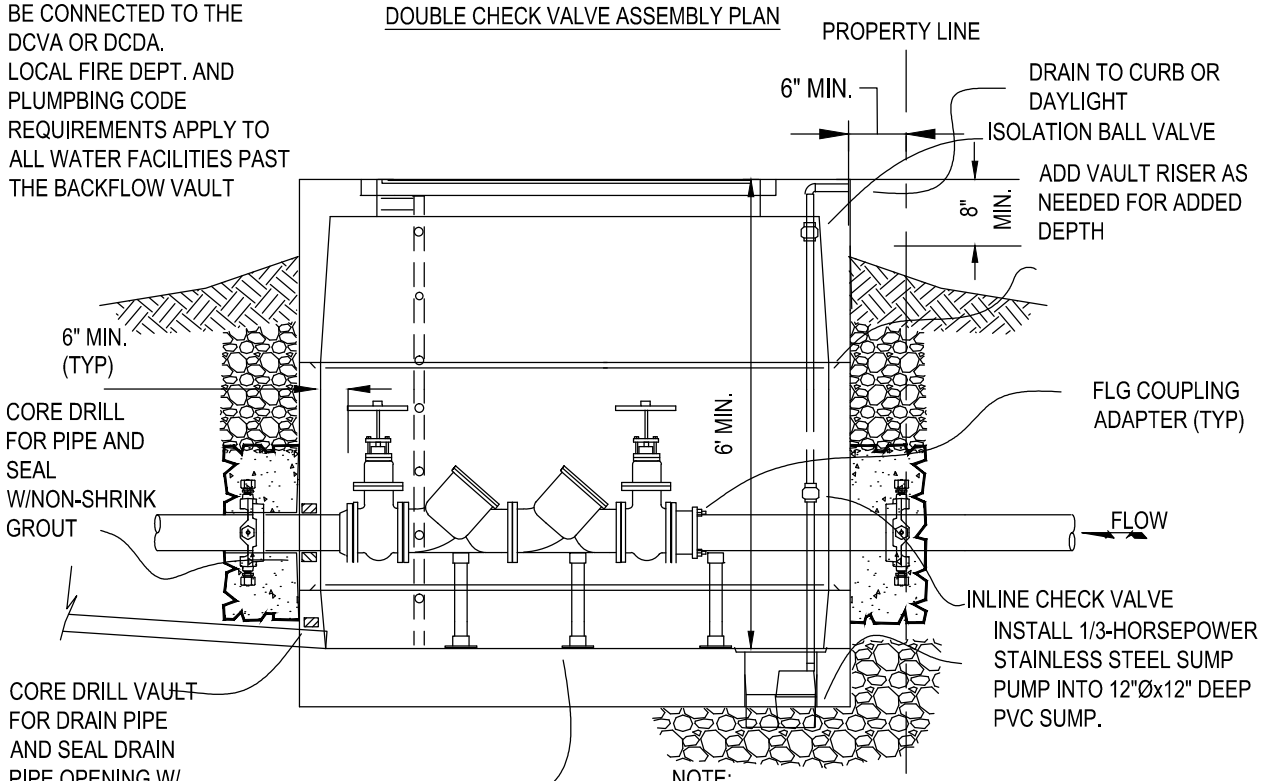

ELEVATION

NOTE:
BACKFLOW DEVICE SHALL BE ON THE OREGON HEALTH AUTHORITY'S LIST OF APPROVED ASSEMBLIES.

COAT ALL OUTSIDE CONC SURFACES OF VAULT W/CRYSTAL SEAL (OR APPROVED EQUAL)

CITY OF FAIRVIEW EST 1908 OREGON	DOUBLE CHECK VALVE ASSEMBLY-DETECTOR SCALE: NTS	DETAIL NUMBER FV462
		REVISED MAR 12, 2018

NOTES:

1. ALL PIPE AND STRUCTURES SHALL BE BACKFILLED WITH ¾"-0 CRUSHED ROCK COMPACTED TO MIN. 95% OF MAX. DENSITY PER AASHTO T-180.
2. SET STATION AT LOT LINE UNLESS OTHERWISE SPECIFIED.
3. WHEN CROSSING CATHODICALLY PROTECTED SYSTEM, PROVIDE A 12" MINIMUM SEPARATION AND APPROVAL FROM CORRESPONDING COMPANY.
4. WHERE NO SIDEWALK EXISTS, PLACE CONC. PAD AS SHOWN. WHERE SIDEWALK EXIST., PLACE MIN. 12" AROUND BACK OF SAMPLE STA. AND INCORPORATE INTO NEW SIDEWALK POUR.

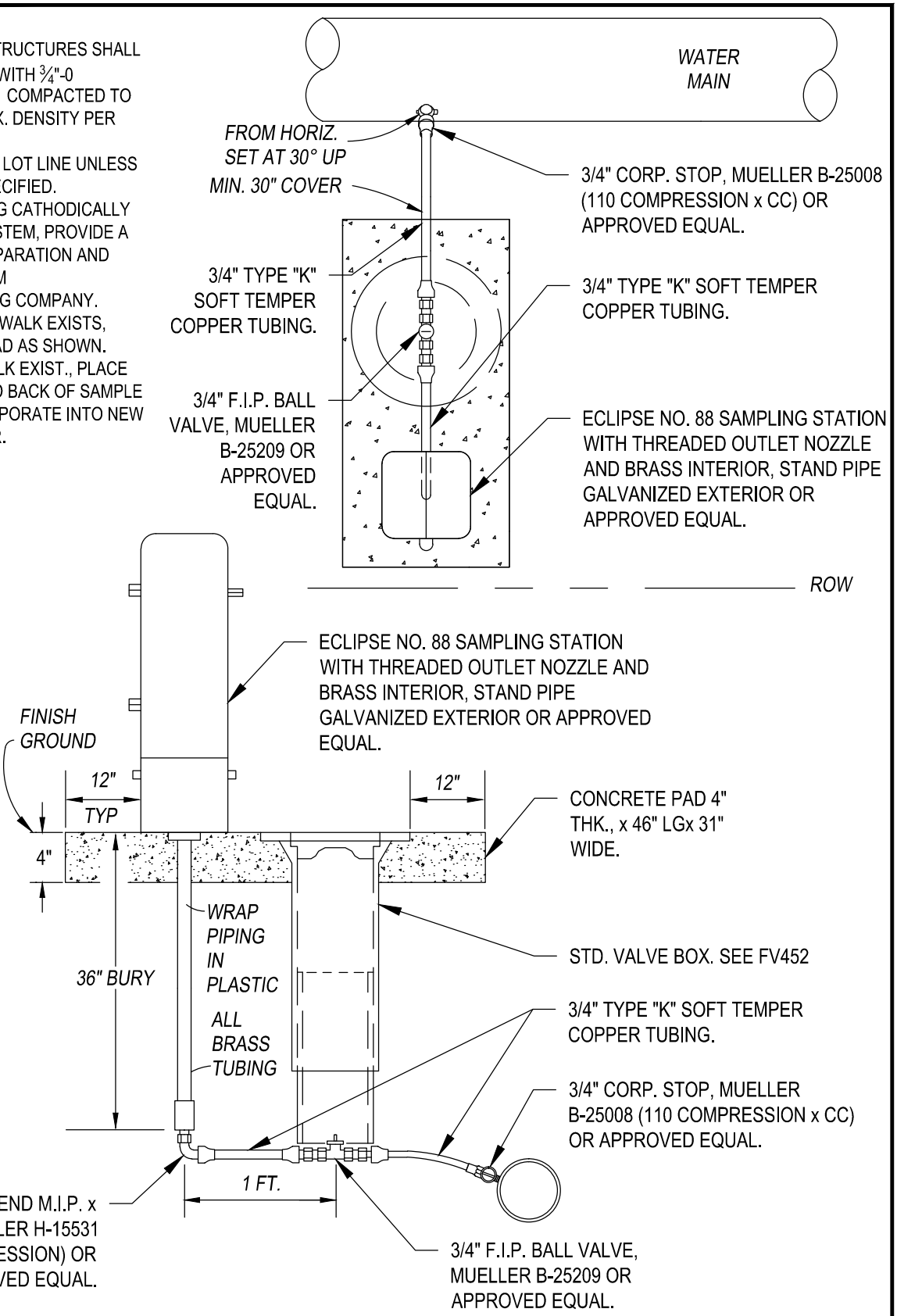

CITY OF FAIRVIEW EST 1908 OREGON	STANDARD WATER SAMPLING STATION SCALE: NTS	DETAIL NUMBER FV463
		REVISED MAR 23, 2017

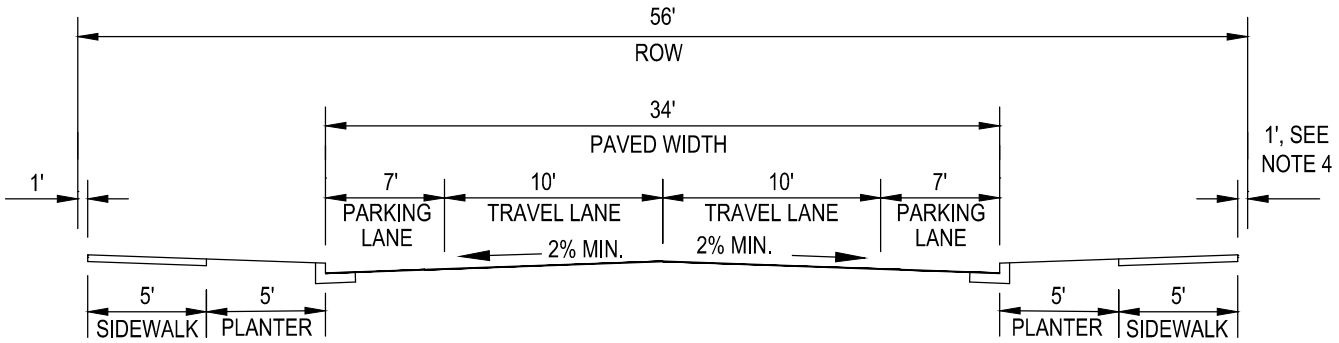

COLLECTOR WITH PARKING

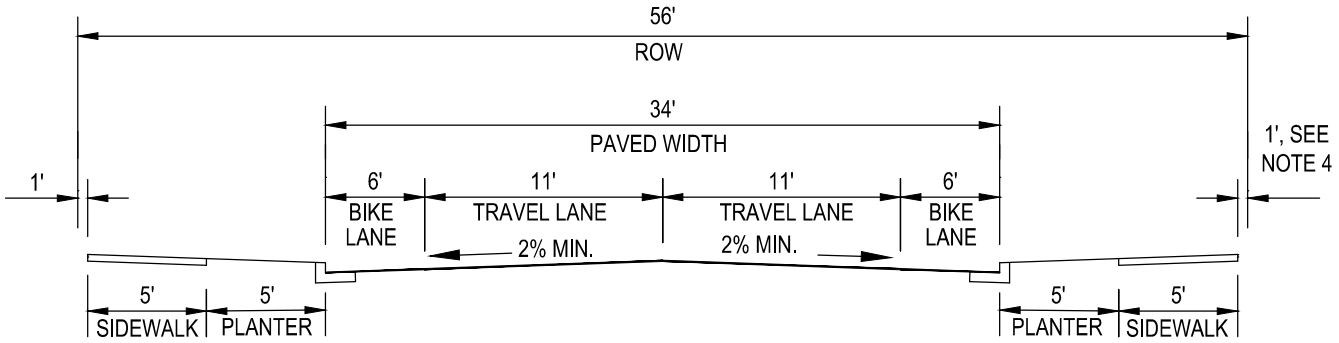

COLLECTOR WITH BIKE LANE

NOTES:

1. A PLANTER STRIP IS REQUIRED ON ALL COLLECTORS.
2. PAVED WIDTH AND PLANTER STRIP ARE MEASURED TO FACE OF CURB.
3. PROVIDE 1-FOOT FROM RIGHT-OF-WAY LINE TO THE BACK OF SIDEWALK FOR MAINTENANCE AND SURVEY MONUMENT PROTECTION.
4. CITY MAY REDUCE SIDEWALK BUFFER WIDTH FROM 1-FOOT TO 0.5-FOOT ON EITHER SIDE OF THE RIGHT OF WAY IN RESIDENTIAL AREAS.
5. STREET TREES AND STREET LIGHTS ARE REQUIRED AND SHALL BE LOCATED WITHIN THE PLANTER STRIP.
6. REFER TO STANDARD DRAWING FV520 FOR STANDARD CURB AND GUTTER.
7. SIDEWALK TO BE IN ACCORDANCE WITH FAIRVIEW STANDARD DRAWING FV521.

CITY OF FAIRVIEW EST 1908 OREGON	COLLECTOR STREET SECTION SCALE: NTS	DETAIL NUMBER FV501
		REVISED MAR 23, 2017

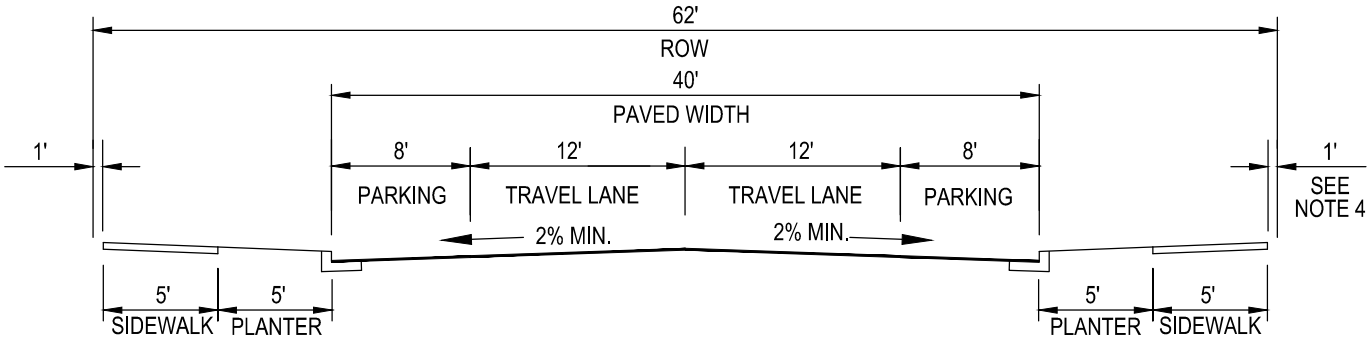

LOCAL INDUSTRIAL

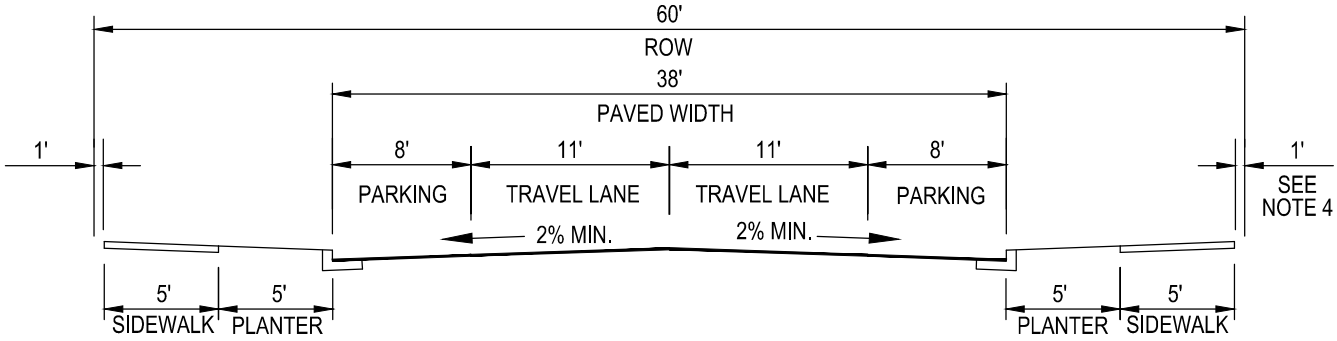

LOCAL COMMERCIAL

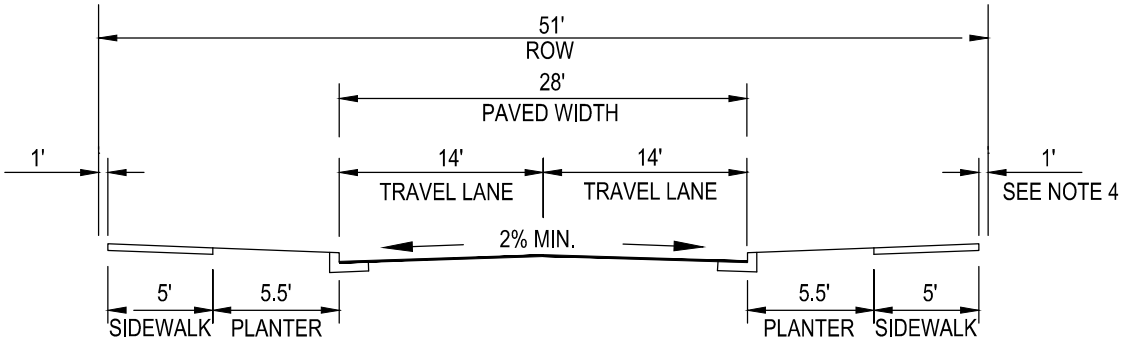

LOCAL RESIDENTIAL

NOTES:

1. A PLANTER STRIP IS REQUIRED ON ALL LOCAL STREETS.
2. PAVED WIDTH AND PLANTER STRIP ARE MEASURED TO FACE OF CURB.
3. PROVIDE 1-FOOT FROM RIGHT-OF-WAY LINE TO THE BACK OF SIDEWALK FOR MAINTENANCE AND SURVEY MONUMENT PROTECTION.
4. CITY MAY REDUCE SIDEWALK BUFFER WIDTH FROM 1-FOOT TO 0.5-FOOT IN RESIDENTIAL AREAS.
5. STREET TREES AND STREET LIGHTS ARE REQUIRED AND SHALL BE LOCATED WITHIN THE PLANTER STRIP.
6. SIDEWALK TO BE IN ACCORDANCE WITH FAIRVIEW STANDARD DRAWING FV521.

CITY OF FAIRVIEW EST 1908 OREGON	LOCAL STREET SECTION SCALE: NTS	DETAIL NUMBER FV502
		REVISED MAR 23, 2017

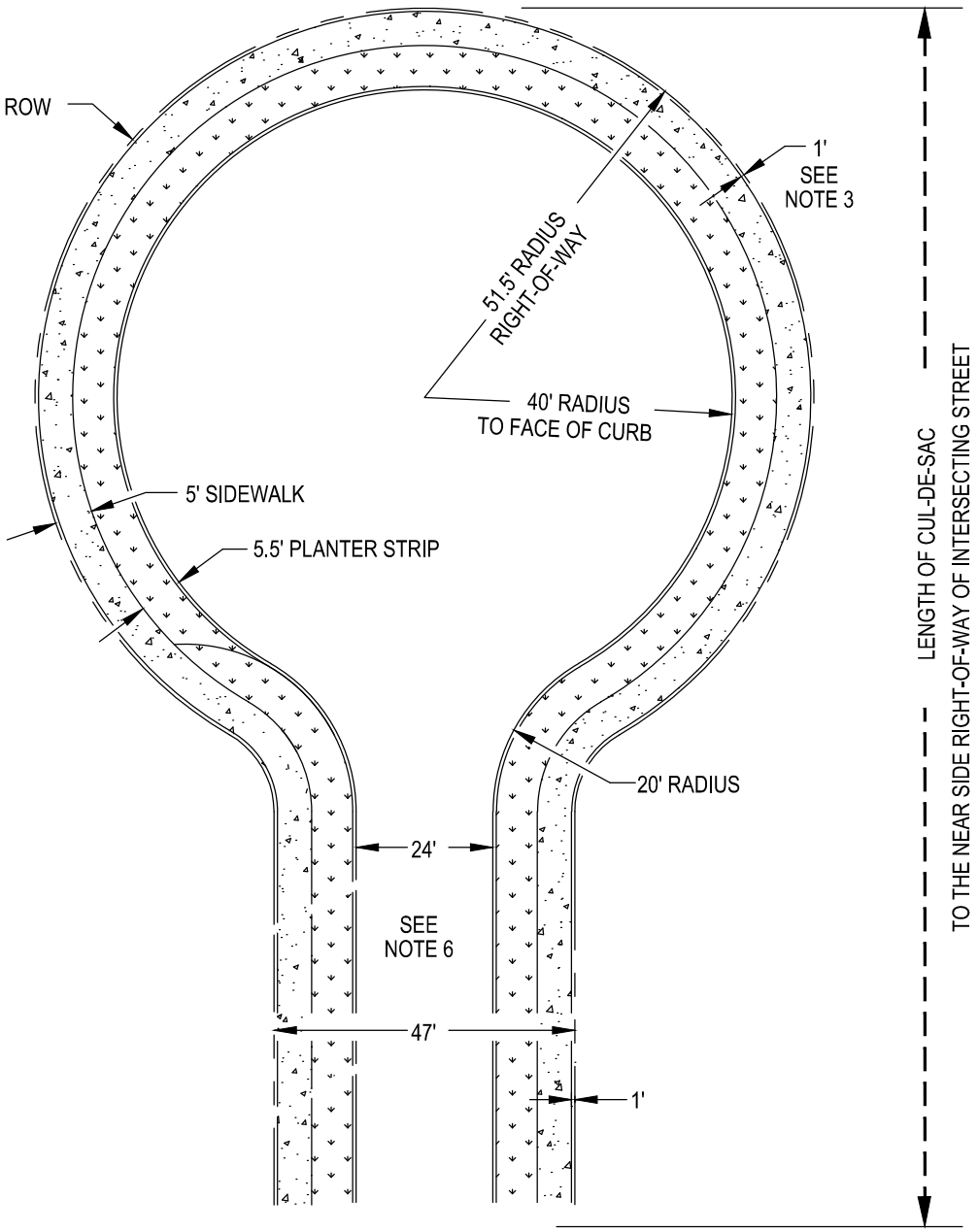

NOTES:

1. LENGTH OF CUL-DE-SAC SHALL NOT EXCEED 200-FEET.
2. NO FIRE HYDRANTS TO BE LOCATED IN THE CUL-DE-SAC AREA.
3. CITY MAY REDUCE SIDEWALK BUFFER WIDTH FROM 1-FOOT TO 0.5-FOOT IN RESIDENTIAL AREAS.
4. THERE SHALL BE A FIRE APPARATUS LANE OF 20-FEET IN WIDTH IF TURNAROUND CONTAINS LANDSCAPE ISLAND OR PARKING BAY.
5. SIDEWALK TO BE IN ACCORDANCE WITH FAIRVIEW STANDARD DRAWING FV521.
6. RIGHT-OF-WAY WIDTH OF 47-FEET AND PAVED WIDTH OF 24-FEET MAY BE ALLOWED ON SHORT CUL-DE-SAC WITH CITY APPROVAL.

CITY OF FAIRVIEW EST 1908 OREGON	CUL-DE-SAC SCALE: NTS	DETAIL NUMBER FV503
		REVISED MAR 23, 2017

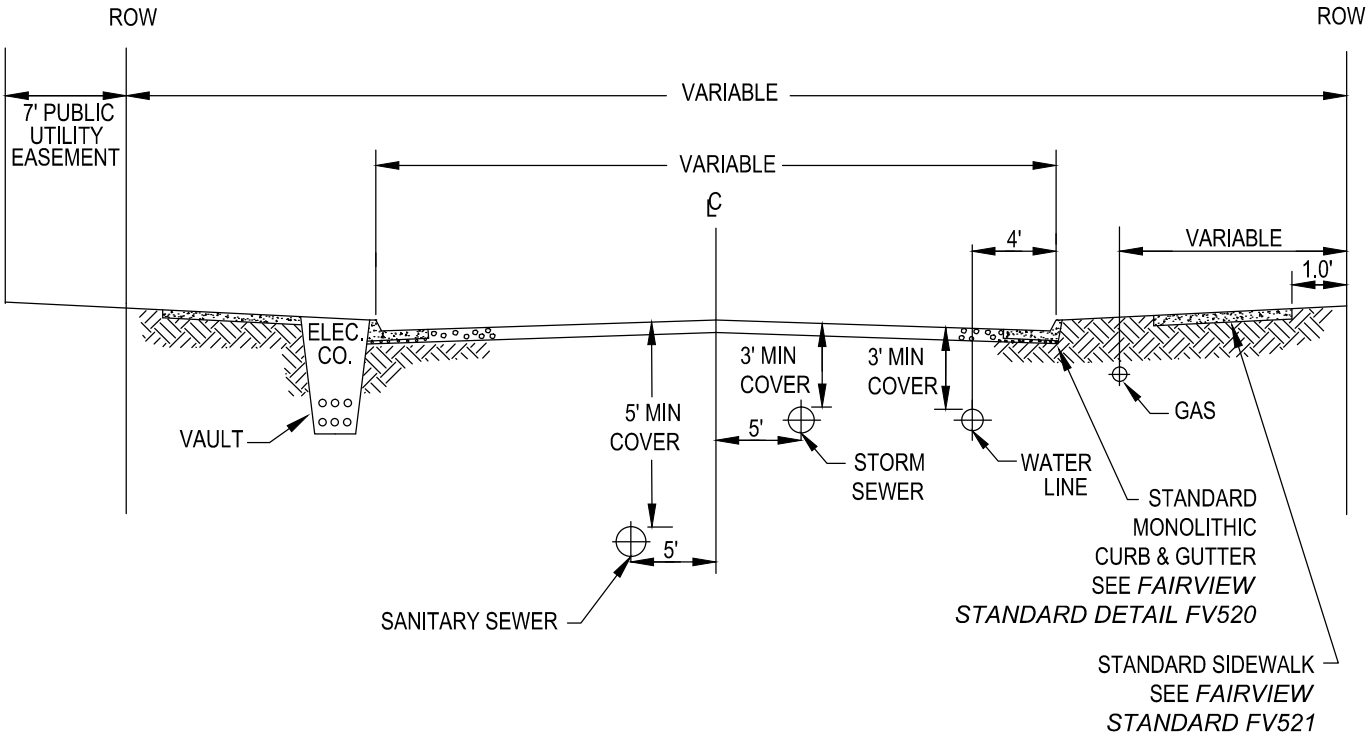

NOTES:

1. UTILITIES SHALL BE LOCATED AS SHOWN UNLESS OTHERWISE APPROVED BY THE CITY.
2. STORM SEWER, WATER, AND GAS ARE TO BE LOCATED ON THE SOUTH OR EAST SIDE OF THE STREET.
3. SANITARY SEWER TO BE LOCATED ON THE NORTH OR WEST SIDE OF THE STREET.
4. INSTALL SANITARY AND STORM SEWER TO *CITY CONSTRUCTION SPECIFICATIONS.*
5. THE SEPARATION BETWEEN WATER LINES AND SEWER LINES, SUBJECT TO APPROVAL BY THE CITY, MAY BE LESS THAN 10 FEET, AS PER *OREGON DEPT. OF HUMAN SERVICES RULES,* CHAPTER 6, *PUBLIC WATER SYSTEMS.*

CITY OF FAIRVIEW EST 1908 OREGON	UTILITY PLACEMENT SCALE: NTS	DETAIL NUMBER FV504
		REVISED MAR 23, 2017

NOTES:

1. PORTLAND CEMENT CONCRETE (PCC) TO HAVE COMPRESSIVE STRENGTH OF 3,300 PSI AT 28 DAYS EXCEPT IN COMMERCIAL AREAS WHERE PCC SHALL HAVE A COMPRESSIVE STRENGTH OF 5,000 PSI AT 28 DAYS.
2. CURB EXPOSURE TO BE 7.5" AT ALL CATCH INLETS
3. EXPANSION JOINTS TO BE PROVIDED AT EACH:
   - 3.1. POINT OF TANGENCY.
   - 3.2. COLD JOINT.
   - 3.3. SIDE OF INLET STRUCTURES.
   - 3.4. SIDE OF DRIVEWAYS.
4. EXPANSION JOINT MATERIAL TO BE PRE-MOLDED, ASPHALT IMPREGNATED, NON-EXTRUDING, WITH A THICKNESS OF 1/2 INCH.
5. CONTRACTION JOINTS SHALL HAVE:
   - 5.1. SPACING OF NOT MORE THAN 15 FEET.
   - 5.2. DEPTH OF JOINT OF AT LEAST 1½ INCHES.
6. BASE ROCK 3/4"-0, 95% (*AASHTO* T-180) COMPACTION. BASE ROCK SHALL BE TO SUBGRADE OF STREET STRUCTURE OR 4 INCHES, WHICHEVER IS GREATER, AND SHALL EXTEND 12 INCHES BEHIND THE CURB.
7. DRAINAGE WEEPHOLE SHALL BE:
   - 7.1. 4-INCH DIAMETER I.D. PLASTIC PIPE WITH COUPLING AND BEVELED OUTLET END TO MATCH FACE OF CURB.
   - 7.2. CENTERED WITH CONTRACTION JOINTS.
   - 7.3. CORE-DRILLED THROUGH EXISTING CURBS FOR DRAINAGE ACCESS.

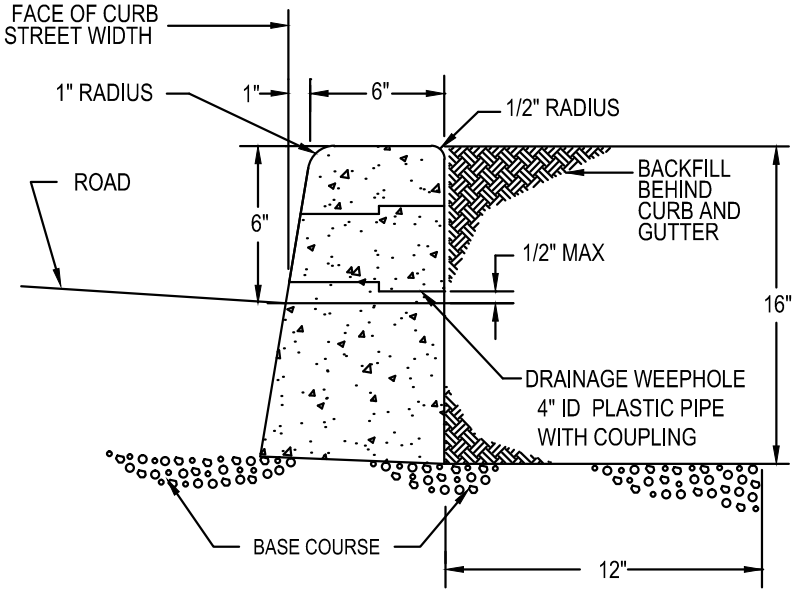

TYPICAL STRAIGHT CURB

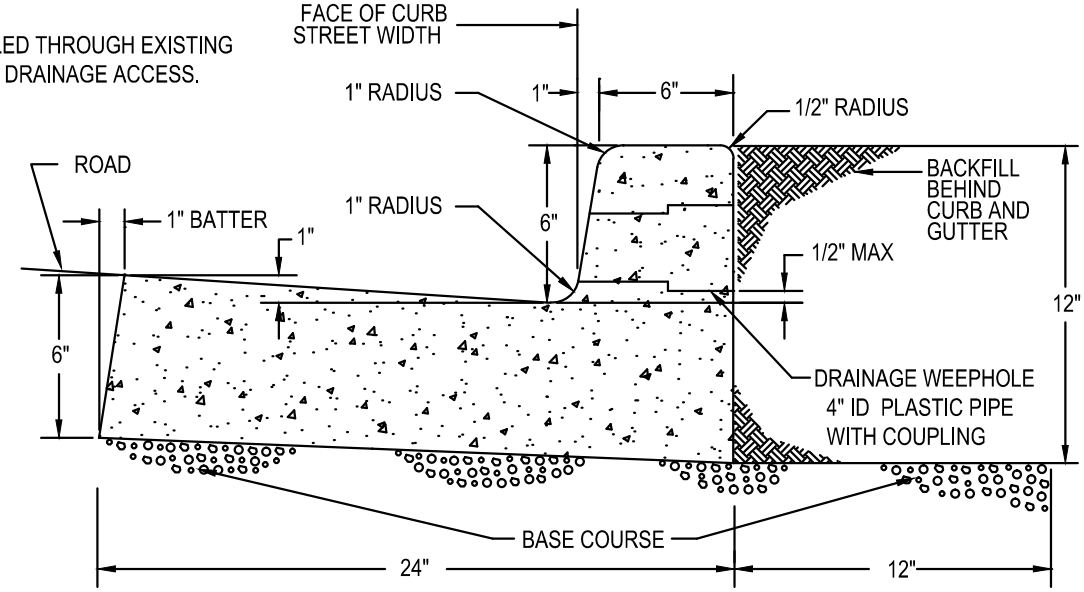

TYPICAL CURB & GUTTER

CITY OF FAIRVIEW EST 1908 OREGON	STANDARD CURBS SCALE: NTS	DETAIL NUMBER FV520
		REVISED MAR 23, 2017

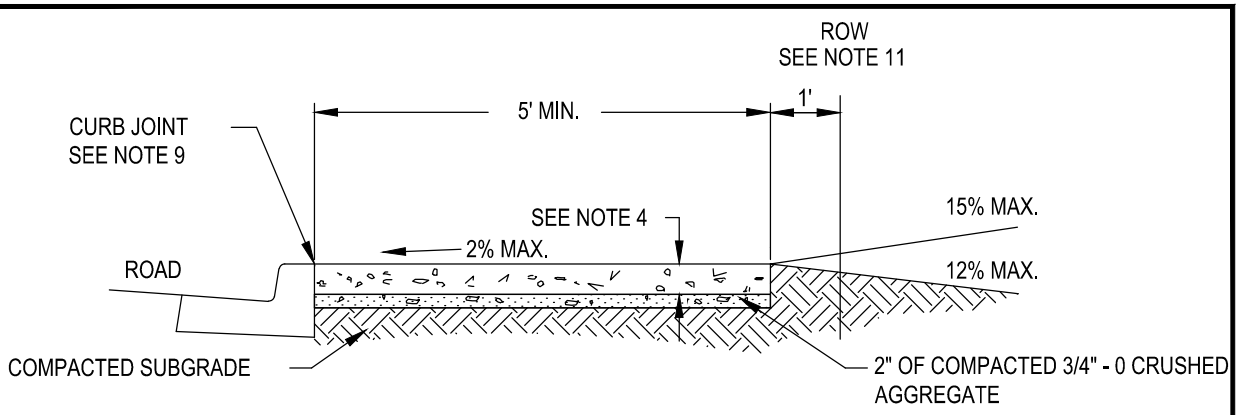

CURB-TIGHT TYPE

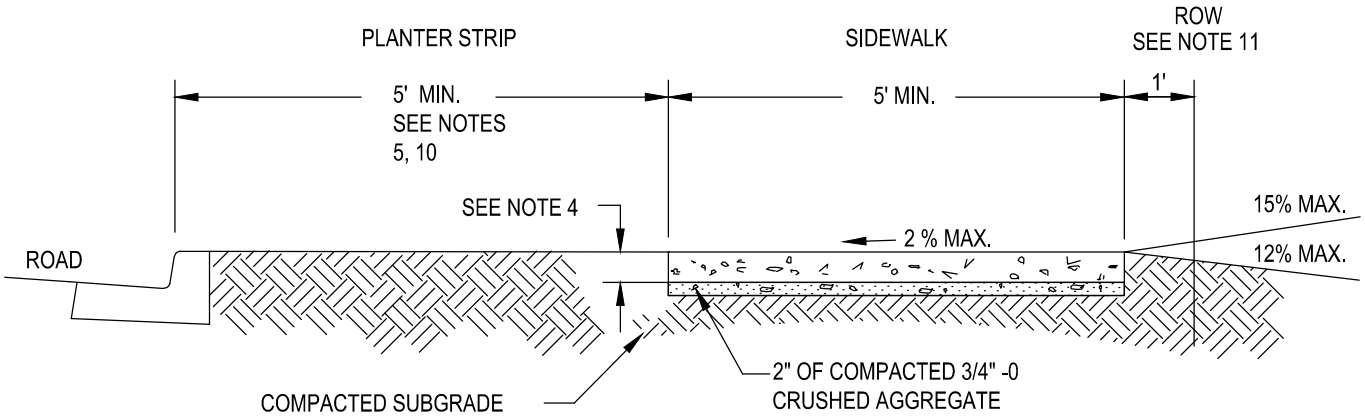

SETBACK TYPE

NOTES:

1. SIDEWALK PANELS SHALL BE SQUARE WITH THEIR LENGTH EQUAL TO THE SIDEWALK'S WIDTH.
2. CONTRACTION JOINTS TO BE PLACED AT SIDES OF DRIVEWAY APPROACHES, UTILITY VAULTS, SIDEWALK RAMPS AND/OR AT POINTS OF TANGENCY IN CURB AS SHOWN ON THE STANDARD DRAWINGS FOR SIDEWALK RAMPS AND AT SPACING NOT TO EXCEED 15 FEET.
3. FINISH ALL SURFACES WITH BROOM AND TROWEL EDGE ALL JOINTS.
4. SIDEWALK SHALL HAVE A MINIMUM THICKNESS OF 4 INCHES, EXCEPT THAT SIDEWALK THAT IS INTENDED AS A PORTION OF A DRIVEWAY SHALL HAVE A MINIMUM THICKNESS OF 6 INCHES. SEE *FAIRVIEW STANDARD DETAIL* FV522 & FV523.
5. WIDTH OF CURB IS INCLUDED IN PLANTER STRIP WIDTH.
6. STREET TREES ARE REQUIRED IN ACCORDANCE TO FAIRVIEW DEVELOPMENT CODE.
7. FOR SIDEWALK REPAIRS, REPLACEMENTS AND INSTALLATIONS IN EXISTING DEVELOPMENTS, MATCH EXISTING WIDTH OF SIDEWALKS, AND SIDEWALK PANELS' WIDTHS AND LENGTHS.
8. ISOLATION JOINT REQUIRED IF ABUTTING AGAINST EXISTING CONCRETE SIDEWALK.
9. FOR SIDEWALKS ADJACENT TO THE CURB AND POURED AT THE SAME TIME AS THE CURB, THE JOINT BETWEEN THEM SHALL BE TROWELED WITH A MINIMUM 1/2 INCH RADIUS.
10. PLANTER STRIP WIDTH FOR LOCAL RESIDENTIAL STREET SHALL BE 5.5-FEET WIDE.
11. CITY MAY REDUCE SIDEWALK BUFFER WITH FROM 1-FOOT TO 0.5-FOOT ON EITHER SIDE OF THE RIGHT OF WAY IN RESIDENTIAL AREAS.

CITY OF FAIRVIEW EST 1908 OREGON	STANDARD SIDEWALK SCALE: NTS	DETAIL NUMBER FV521
		REVISED MAR 23, 2017

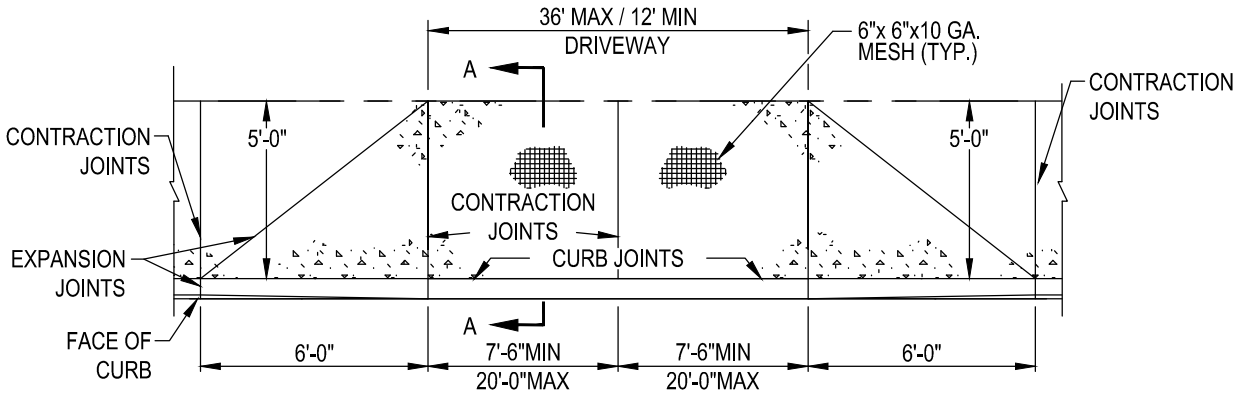

PLAN

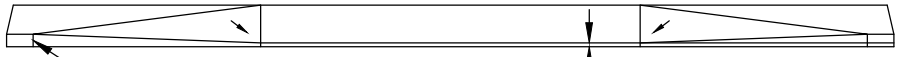

ELEVATION

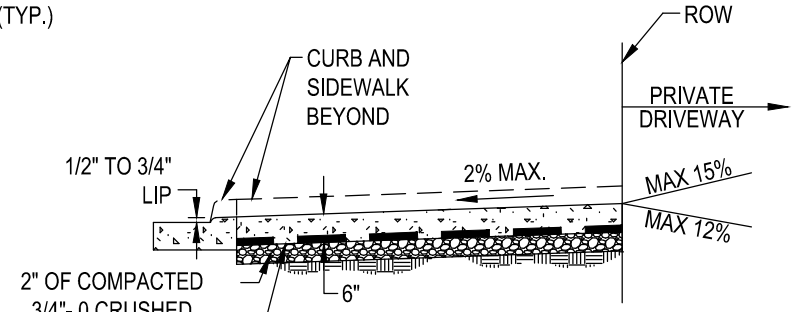

SECTION A-A

NOTES:

1. CURB JOINT SHALL BE A TROWELED JOINT WITH A MINIMUM 1/2 INCH RADIUS ALONG BACK OF CURB.
2. EXPANSION JOINT MATERIAL TO BE PRE-MOLDED, ASPHALT IMPREGNATED, NON-EXTRUDING, WITH A THICKNESS OF1/2 INCH.
3. FOR DRIVEWAYS 24 FEET WIDE OR GREATER, CONCRETE TO BE INCREASED TO A 7 INCH DEPTH.
4. FINISH ALL SURFACES WITH BROOM AND TROWEL EDGE ALL JOINTS.
5. WEEPHOLES NOT TO BE PLACED IN WING.
6. IF CURBING IS BEING REMOVED TO INSTALL A DRIVEWAY SEE STANDARD DRAWING FV526.
7. WINGS OF THE COMMERCIAL DRIVEWAY WHICH ARE A PORTION OF THE SIDEWALK SHALL NOT EXCEED 8.333% (1:12).

CITY OF FAIRVIEW EST 1908 OREGON	COMMERCIAL DRIVEWAY (CURB-TIGHT SIDEWALK) SCALE: NTS	DETAIL NUMBER FV522A
		REVISED MAR 23, 2017

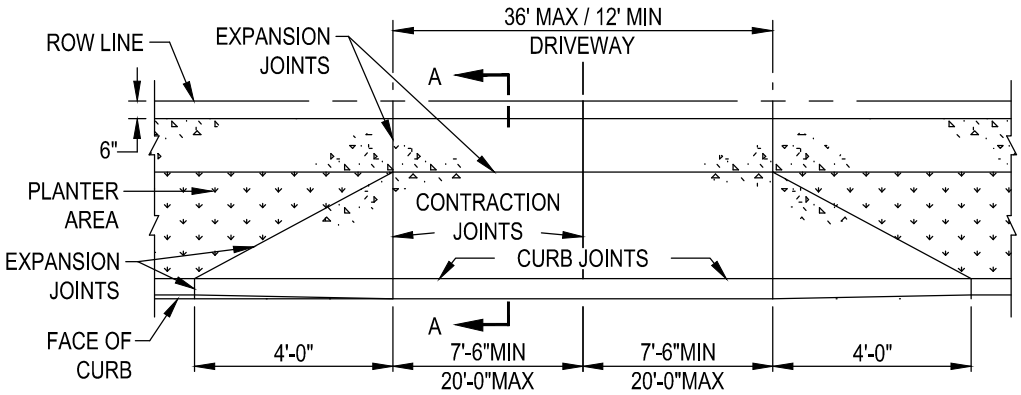

PLAN

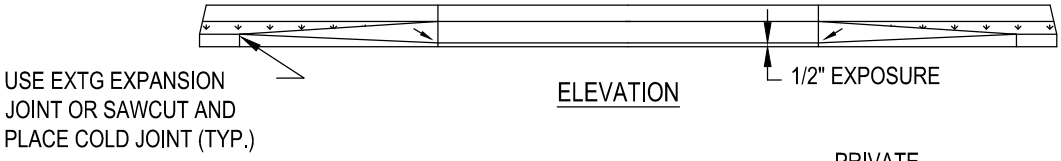

ELEVATION

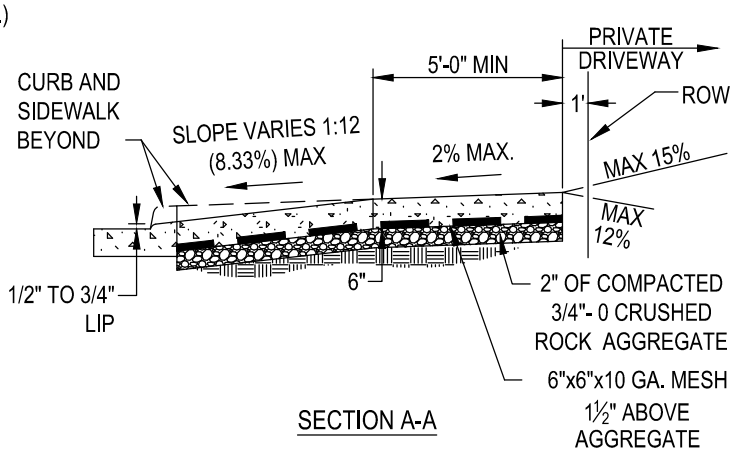

SECTION A-A

NOTES:

1. CURB JOINT SHALL BE A TROWELED JOINT WITH A MINIMUM 1/2 INCH RADIUS ALONG BACK OF CURB.
2. EXPANSION JOINT MATERIAL TO BE PRE-MOLDED, ASPHALT IMPREGNATED, NON-EXTRUDING, WITH A THICKNESS OF1/2 INCH.
3. FOR DRIVEWAYS 24 FEET WIDE OR GREATER, CONCRETE TO BE INCREASED TO A 7 INCH DEPTH.
4. FINISH ALL SURFACES WITH BROOM AND TROWEL EDGE ALL JOINTS.
5. WEEPHOLES NOT TO BE PLACED IN WING.
6. IF CURBING IS BEING REMOVED TO INSTALL A DRIVEWAY SEE STANDARD DRAWING FV526.
7. WINGS OF THE COMMERCIAL DRIVEWAY WHICH ARE A PORTION OF THE SIDEWALK SHALL NOT EXCEED 8.333% (1:12).

CITY OF FAIRVIEW EST 1908 OREGON	COMMERCIAL DRIVEWAY (PLANTER STRIP) SCALE: NTS	DETAIL NUMBER FV522B
		REVISED MAR 23, 2017

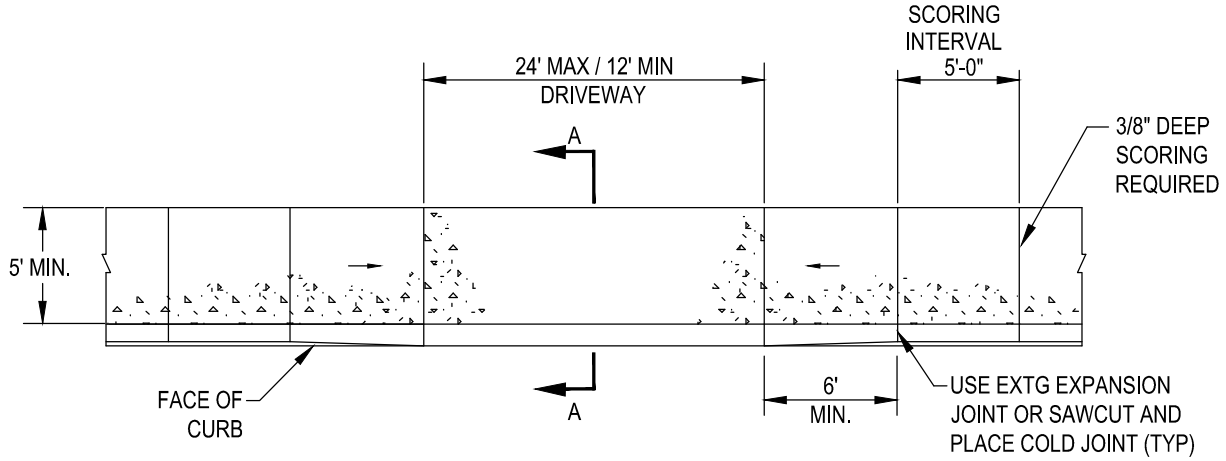

PLAN

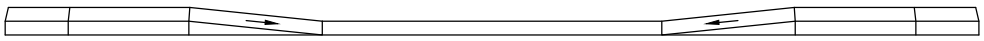

ELEVATION

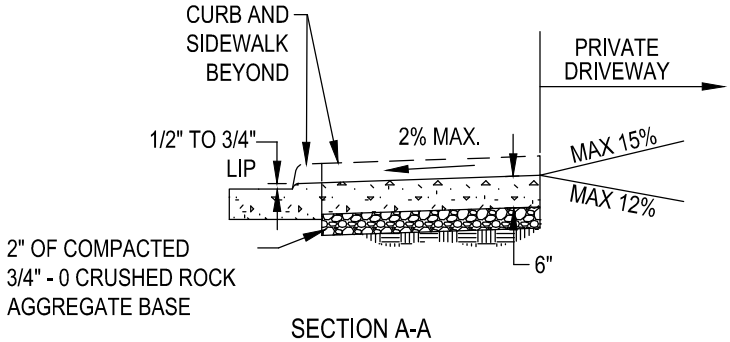

SECTION A-A

NOTES:

1. RESIDENTIAL DRIVEWAY APPROACHES SHALL HAVE A MINIMUM DEPTH OF 6-INCHES.
2. DRIVEWAY APPROACH SHALL NOT SLOPE MORE THAN 2% IN ANY DIRECTION.
3. FINISH ALL SURFACES WITH BROOM AND TROWEL EDGE ALL JOINTS.
4. IF CURBING IS BEING REMOVED TO INSTALL A DRIVEWAY SEE STANDARD DRAWING FV526.
5. CURB JOINT SHALL BE A TROWELED JOINT WITH A MINIMUM 1/2 INCH RADIUS ALONG BACK OF CURB.
6. EXPANSION JOINT MATERIAL TO BE PRE-MOLDED, ASPHALT IMPREGNATED, NON-EXTRUDING, WITH A THICKNESS OF1/2 INCH.
7. WEEPHOLES SHALL NOT BE PLACED IN WING.
8. PLANTER WIDTH SHALL BE 5.5-FEET MINIMUM ON LOCAL RESIDENTIAL STREETS.

CITY OF FAIRVIEW EST 1908 OREGON	STANDARD DRIVEWAY (CURB-TIGHT SIDEWALK) SCALE: NTS	DETAIL NUMBER FV523A
		REVISED MAR 23, 2017

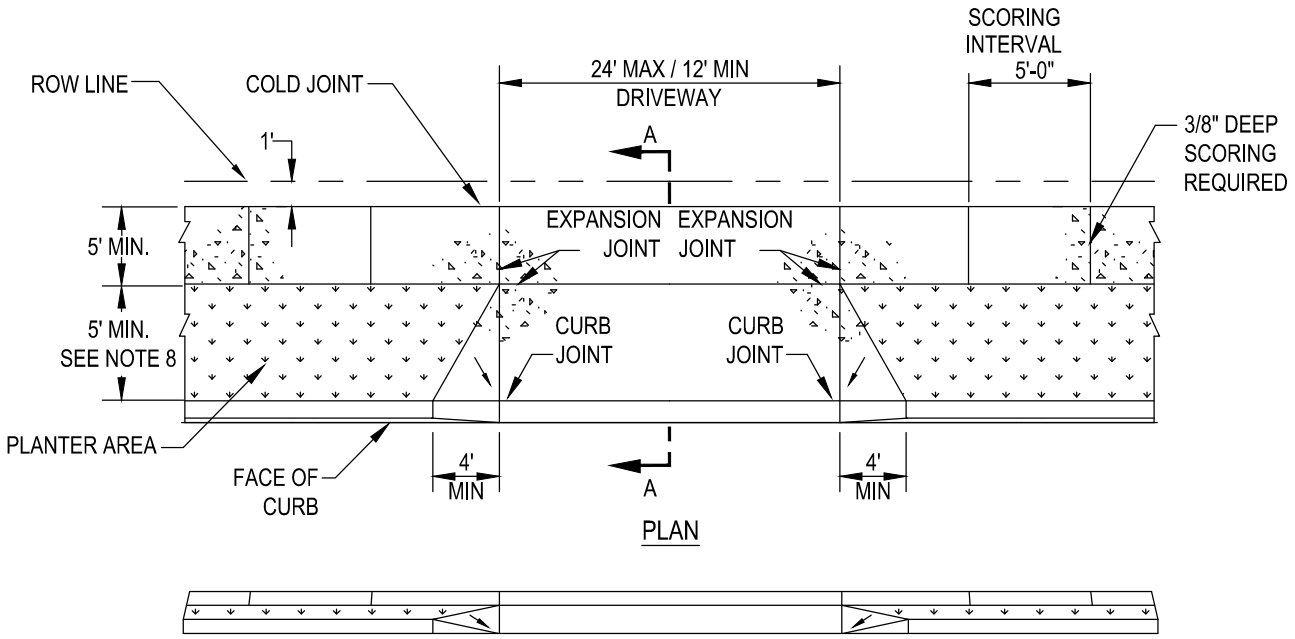

PLAN

ELEVATION

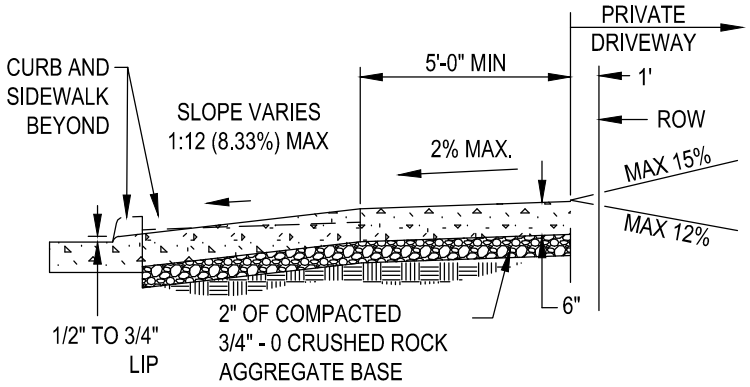

SECTION A-A

NOTES:

1. RESIDENTIAL DRIVEWAY APPROACHES SHALL HAVE A MINIMUM DEPTH OF 6-INCHES AND SIDEWALK SECTIONS THROUGH DRIVEWAYS SHALL HAVE A MINIMUM DEPTH OF 6-INCHES.
2. DO NOT SLOPE LANDING MORE THAN 2% IN ANY DIRECTION.
3. FINISH ALL SURFACES WITH BROOM AND TROWEL EDGE ALL JOINTS.
4. IF CURBING IS BEING REMOVED TO INSTALL A DRIVEWAY SEE STANDARD DRAWING FV526.
5. CURB JOINT SHALL BE A TROWELED JOINT WITH A MINIMUM 1/2 INCH RADIUS ALONG BACK OF CURB.
6. EXPANSION JOINT MATERIAL TO BE PRE-MOLDED, ASPHALT IMPREGNATED, NON-EXTRUDING, WITH A THICKNESS OF1/2 INCH.
7. WEEPHOLES SHALL NOT BE PLACED IN WING.
8. PLANTER WIDTH SHALL BE 5.5-FEET MINIMUM ON LOCAL RESIDENTIAL STREETS.

CITY OF FAIRVIEW EST 1908 OREGON	STANDARD DRIVEWAY (PLANTER STRIP) SCALE: NTS	DETAIL NUMBER FV523B
		REVISED MAR 23, 2017

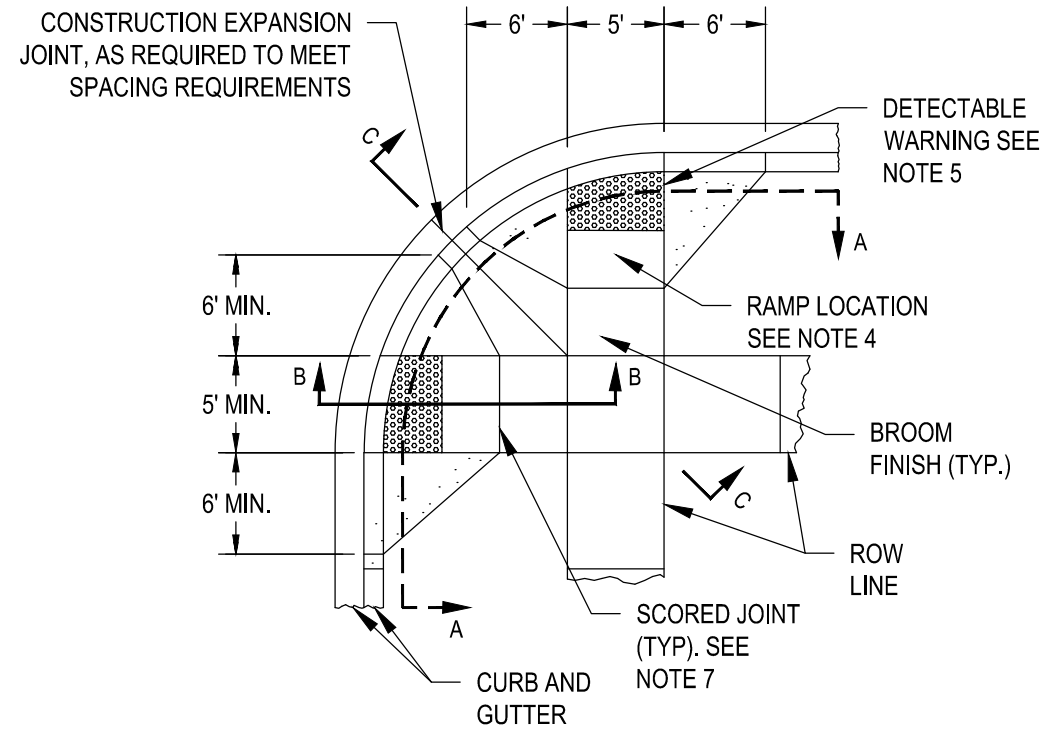

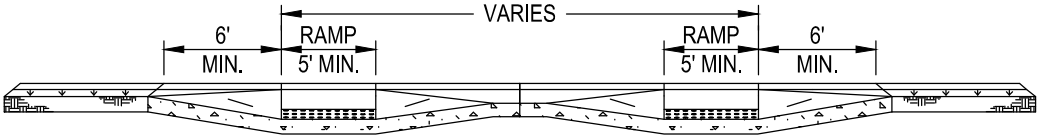

SECTION A-A

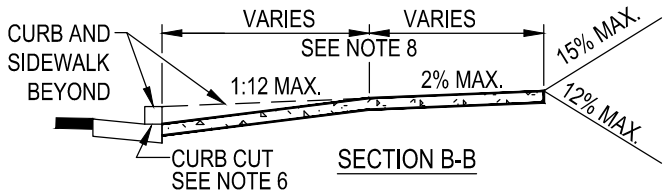

SECTION B-B

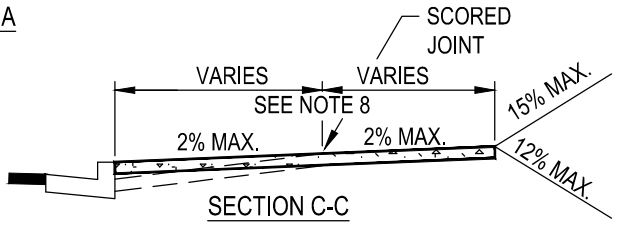

SECTION C-C

NOTES:

1. TWO SIDEWALK RAMPS PER CORNER REQUIRED FOR ALL NEW INTERSECTIONS.
2. SINGLE DIAGONAL RAMP MAY BE USED WITH CITY APPROVAL WHEN SITE CONSTRAINTS PROHIBIT INSTALLATION OF TWO SIDEWALK RAMPS.
3. SIDEWALK RAMP SHALL MEET *ADA STANDARDS* AND IS NOT TO EXCEED A 2% SLOPE IN ANY DIRECTION.
4. EACH RAMP SHALL BE LOCATED RELATIVE TO CROSSWALK OR STOP LINE.
5. TRUNCATED DOME DETECTABLE WARNING SHALL BE 24 INCHES LONG IN THE DIRECTION OF TRAVEL AND FULL WIDTH OF THE RAMP, MADE OF CONCRETE IMBEDDED YELLOW TILES, THAT HAVE TRUNCATED DOMES ALIGNED ON A SQUARE GRID WITH ITS GRIDLINES PARALLEL AND PERPENDICULAR TO THE CENTERLINE OF THE RAMP.
6. BEVEL THE CURB CUT FROM GUTTER TO BACK OF CURB AT 8.33% (1:12).
7. SCORE AT GRADE CHANGES, SURFACE TEXTURE CHANGES AND AT OTHER POINTS SHOWN. EDGES SHALL BE SHINED.
8. FOR SIDEWALK AND PLANTER STRIP WIDTHS AND SIDEWALK PANEL DIMENSIONS, SEE *FAIRVIEW STANDARD DRAWING* FV501 AND FV502.
9. CURB INLET OR CATCH BASIN SHALL NOT BE ALLOWED IN FRONT OF SIDEWALK RAMP.

CITY OF FAIRVIEW EST 1908 OREGON	WHEELCHAIR AND HANDICAP RAMPS SCALE: NTS	DETAIL NUMBER FV525
		REVISED MAR 23, 2017

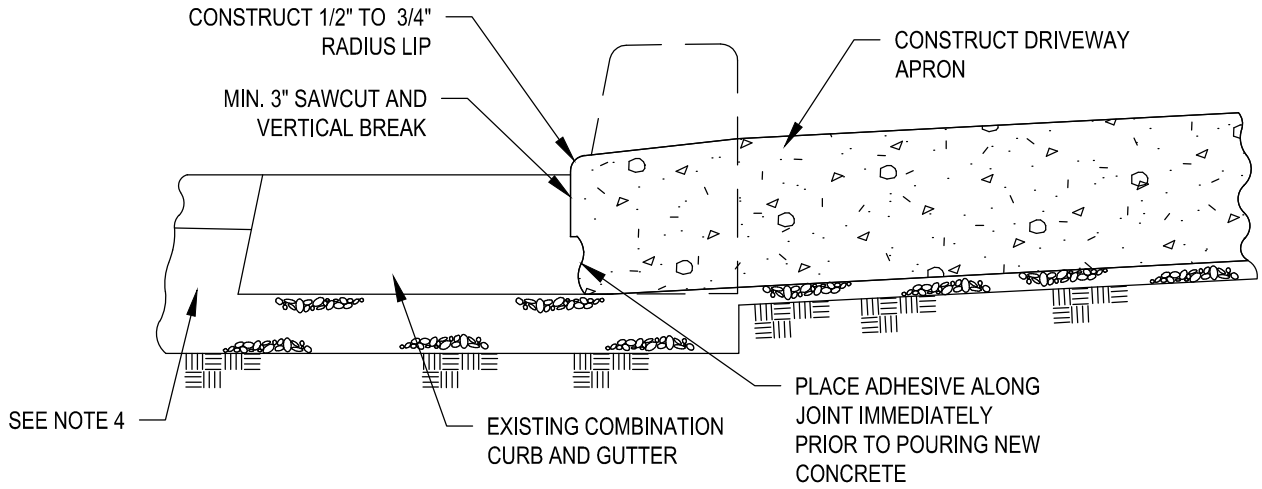

NOTES:

1. SAWCUT THROUGH GUTTER PLATE SHALL BE MADE AS CLOSE TO CURB FACE AS POSSIBLE.
2. COMPLETE CURB AND GUTTER SHALL NOT BE REMOVED UNLESS DIRECTED BY THE CITY.
3. WHEN STRAIGHT CURBS ARE REMOVED, A MINIMUM OF 2 FEET OF PAVEMENT FROM THE FACE OF CURB SHOULD BE REMOVED AND REPLACED.
4. WHEN ENTIRE GUTTER PLATE IS REMOVED THE EXISTING PAVEMENT SHALL BE CUT BACK AND A 6" THICK MONOLITHIC CONCRETE BENCH SHALL BE CONSTRUCTED WITH THE NEW GUTTER TO PROVIDE SUPPORT UNDER PAVEMENT.

CITY OF FAIRVIEW EST 1908 OREGON	CURB KNOCKOUT SCALE: NTS	DETAIL NUMBER FV526
		REVISED MAR 23, 2017

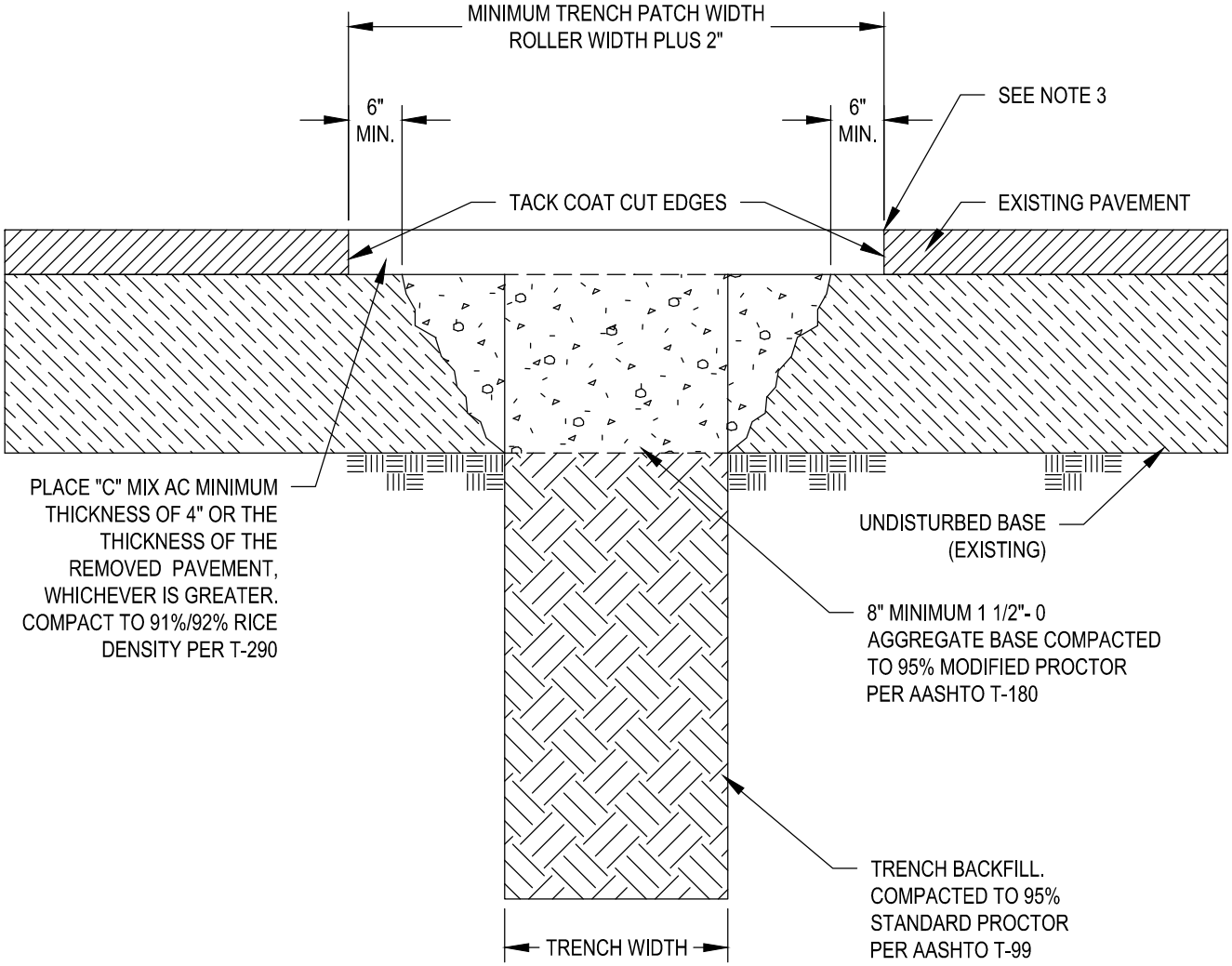

NOTES:

1. ALL EXISTING AC OR PCC PAVEMENT SHALL BE SAWCUT PRIOR TO REPAVING.
2. CONCRETE PAVEMENT SHALL BE REPLACED WITH CONCRETE TO A MINIMUM THICKNESS OF 6" OR TO THE THICKNESS OF REMOVED PAVEMENT, WHICHEVER IS GREATER. ALL CUT EDGES OF AC SHALL BE SAND SEALED WITH CRS-1 OR CRS-2 EMULSIFIED ASPHALT OR EQUAL.
3. IF NEW EDGE OF PAVEMENT IS LESS THAN THREE FEET FROM ANOTHER PATCH, CURB OR EDGE OF STREET, REPLACE THE PAVEMENT IN BETWEEN.
4. ON LONGITUDINAL PAVEMENT CUTS, THE EDGE OF THE T-CUT SHALL NOT LIE IN A WHEEL PATH. WIDTH OF T-CUT SHALL BE WIDENED WHERE NECESSARY TO MOVE THE EDGE OUT OF THE WHEEL PATH AND EITHER TO PARALLEL AND 6 INCHES FROM THE NEAREST LANE LINE, OR TO THE LOCATION REQUIRED BY NOTE 3 ABOVE AS APPLICABLE, WHICHEVER IS THE FURTHEST FROM THE PAVEMENT CUT.

CITY OF FAIRVIEW EST 1908 OREGON	STREET CUT AND REPAIR SCALE: NTS	DETAIL NUMBER FV527
		REVISED MAR 23, 2017

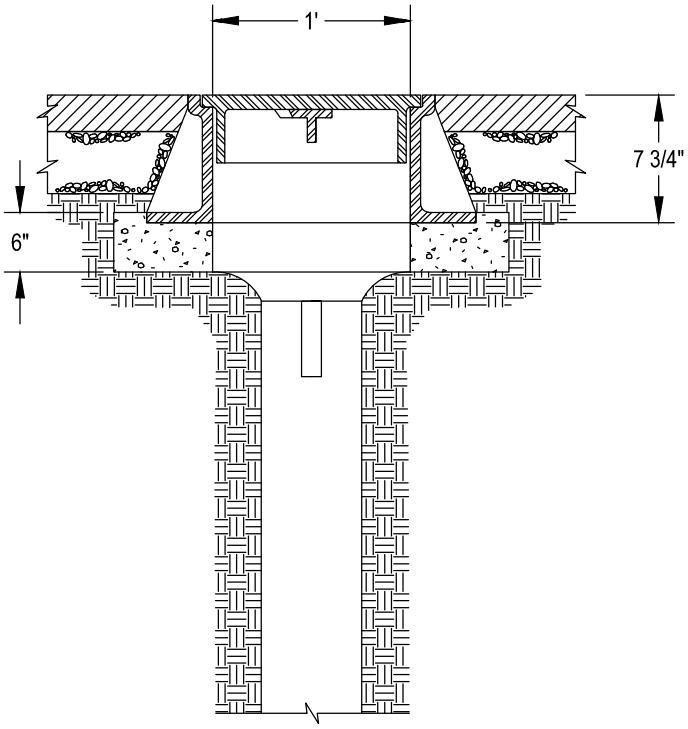

NOTES:

1. FOR MAJOR STREET INTERSECTIONS AS REQUIRED BY THE CITY.
2. FRAME AND COVER SHALL BE CAST IRON OR ALUMINUM.
3. COVER SHALL HAVE "MONUMENT" CAST INTO TOP.
4. PLACEMENT OF BRASS CAP AND MONUMENT BOX SHALL FOLLOW MULTNOMAH COUNTY SURVEYORS OFFICE STANDARDS.

CITY OF FAIRVIEW EST 1908 OREGON	MONUMENT BOX SCALE: NTS	DETAIL NUMBER FV529
		REVISED MAR 23, 2017